Historic, Archive Document

Do not assume content reflects current scientific knowledge, policies, or practices.

1.9422
M8In3
cop 2

Revised July 1952

U. S. DEPARTMENT OF AGRICULTURE

INFORMATION FOR APPLICANTS FOR FEDERAL MEAT INSPECTION

By the Federal Meat Inspection Service

The Federal Meat Inspection Service is administered by the Meat Inspection Service of the Bureau of Animal Industry. The administrative offices are in Washington, D. C.

The purpose of the Federal Meat Inspection Act approved March 4, 1907, is stated in the Act as:

> ". . . for the purpose of preventing the use in interstate or foreign commerce . . . of meat and meat food products which are unsound, unhealthful, unwholesome, or otherwise unfit for human food . . . ."

The Act is intended to assure a healthful and wholesome meat supply in interstate and foreign commerce. The inspection maintained at a plant covers the entire production of the plant regardless of the proportion shipped in interstate or foreign trade.

The Act of 1907 applies only to cattle (including calves), sheep, swine, and goats, and the edible products derived from their carcasses. Its provisions are, however, extended to horses by the Horse-Meat Act. The slaughtering of horses or the preparation, processing and handling of horse meat must be conducted in establishments wholly separate and apart from those slaughtering cattle, sheep, swine, and goats, or preparing products derived from such animals. Wild animals, poultry, fish, and game are not subject to its provisions. Food products derived from such species are subject to State laws and local ordinances, and, if shipped in interstate or foreign commerce, are subject also to the provisions of the Food, Drug and Cosmetic Act, administered by the Food and Drug Administration of the Federal Security Agency. Dressed poultry and poultry products may also be inspected by the Poultry Inspection Service of this Department.

The cost of Federal meat inspection is paid by the Government insofar as the salaries of inspectors for services during regular hours are concerned. However, the packer is required to compensate the Government for the cost of overtime inspection. The cost of preparing, equipping, and maintaining the plant in condition to meet inspection requirements, and losses resulting from condemnation of animals, carcasses, or products must be borne by the owner or operator of the plant.

LIBRARY
CURRENT SERIAL RECORD
MAR 6 1953
U. S. DEPARTMENT OF AGRICULTURE

Under certain specific provisions of the Act, retail meat dealers and farmers may make interstate shipments of meats or meat food products without operating under Federal inspection; however, the Secretary of Agriculture may, at his discretion, require that such persons apply and qualify for the inspection. The term "farmer", insofar as Federal meat inspection is concerned, is defined in the Meat Inspection Act.

The owner or operator of any slaughtering or meat processing plant who contemplates engaging in interstate or foreign trade in meat or products derived from cattle (including calves), sheep, swine, or goats, or furnishing such products to Federal agencies, should address the Chief, Meat Inspection Service, Bureau of Animal Industry, U. S. Department of Agriculture, Washington 25, D. C., and furnish detailed information relative to the nature and volume of the proposed operations. In reply, he will be informed whether the proposed business requires or entitles him to Federal inspection, and if so, he will be furnished a form upon which he may make a formal application therefor. With such application he will be required to furnish plans and specifications of the proposed plant, as hereinafter indicated. Pending the receipt of information concerning the eligibility of the plant for the inspection, including the approval of plans and specifications, it is highly important that the applicant refrain from acquiring property, or undertaking construction, or remodeling for the contemplated operations, as failure to observe this suggestion may result in unnecessary expense and inconvenience.

Drawings to Accompany Application for Inspection

Blueprints of drawings with specifications, in triplicate, of the applicant's plant as he proposes to have it constructed and equipped for the inspection should be submitted to the Meat Inspection Service at Washington, D. C., with the application for inspection in duplicate. The drawings should be prepared to scale, preferably 1/4-inch to a foot and should include the following:

(a) Plot plan of the entire premises showing location of all buildings, livestock pens, roadways, railroad trackage, streets and alleys adjoining the plant, streams, catch basins, water wells, reservoirs, and storage tanks. If nearby buildings exist on adjoining property, their height and use should be indicated. The character and surfacing of roadways, driveways, streets, and the paving of vehicular loading areas, livestock pens and alleys should be indicated. A scale of 1/8-inch to a foot or less is acceptable for this drawing depending upon the size of the premises.

(b) Floor plans of each level in the various buildings showing the locations of walls, partitions, posts, doorways, windows, and other openings, floor drainage inlets and drip valleys, rail systems for conveying carcasses, parts and product, chutes, arrangement of slaughtering layouts, location of the principal pieces of equipment,

hot and cold water hose connections, and hand-washing facilities (lavatories). The slope of floors to drainage facilities should be indicated by grade lines. The location of sectional lines should be shown on the floor plans. For convenient reference, it is desired that the north point be shown on the floor plans as well as on the plot plan.

(c) Cross sections and longitudinal sections of the various buildings showing the character and finish of floors, walls, partitions, ceilings; heights of ceilings; the principal pieces of equipment; and rails.

(d) Exterior elevations on each side of each building showing locations and sizes of doors, windows, and other openings.

(e) Roof plan showing skylights, vents and other pertinent information.

(f) Specifications or notations (see Pages 18-26) placed directly on the drawings, or separate from but attached to them, covering features such as source of water supply, method of sewage disposal, description of the trapping and venting of drainage lines, description of hot water system, description of operations, means to dispel steam and vapor in workrooms, screens for outer openings that would admit flies, etc.

It is desired that drawings be made on sheets not larger than 30" x 42". More than one sheet may be used for a floor plan by indicating match lines.

If the examination of the drawings and specifications shows that they meet the requirements, the formal mark of approval is placed on them and an approved set is returned to the applicant. The other two sets are retained for reference.

Once drawings have been approved and later it is found necessary or desirable to make changes, the same should be illustrated by revised drawings or paster drawings made to the same scale as the approved drawings to be amended. Paster drawings should show all the features of the approved drawing (floor drains, rails, equipment, refrigerating units, etc.) that are to be retained.

Because of the specialized knowledge required to design and construct a well-arranged meat packing plant, a competent architect or engineer experienced in laying out plants for operation under Federal meat inspection should be employed to prepare the drawings and specifications. Construction should be deferred until the drawings and specifications have been approved by the Meat Inspection Service.

Location of Establishments

Features of primary importance in connection with the location of a slaughtering or processing plant operated under Federal meat inspection are:

Water Supply: Must be ample, potable (fit for drinking), and distributed throughout the plant under adequate pressure and in quantities sufficient for all operating needs. Both hot and cold water should be provided, the hot water from a central heating plant of sufficient capacity or from other suitable facilities capable of furnishing an ample supply. (Not by mixing steam and water at or near outlet). Water from public water supply systems is usually, but not invariably, acceptable. If the water is supplied from private wells, the wells should be upon the premises of the establishment and effectively protected from pollution. A non-potable water supply is a potential source of danger. If such a supply is necessary for fire protection or for the condensers of the refrigerating system, it should be kept separate from the potable supply. If a cross-connection between the two supplies is necessary, it should be one that will adequately safeguard the potable supply, and be acceptable to the Meat Inspection Service and local health authorities. Non-potable water lines within buildings in which edible products departments are located should be avoided. Vacuum breakers of an acceptable type should be provided on all steam and water lines when the open ends are submerged or connected to various pieces of equipment. If chlorinators are required to assure a continuous potable supply, they should be of the automatic type and provided with devices that inform the plant management and inspector when they have ceased to function.

Sewage Disposal: This may be into a municipal sewer system and, if permitted by local ordinance, it is most desirable. If the discharge is into a stream, the flow must be sufficient at all seasons to carry the sewage well away from the plant and the method of disposal acceptable to local health authorities having jurisdiction over such matters. If sewage is not disposed into a municipal system, a letter from the proper health authorities (state, county, city), indicating proposed system is acceptable should be submitted with the drawings.

Expansion; Relation of Inedible to Edible Products Departments: In designing a plant, due consideration should be given to providing space and an arrangement of buildings that will permit of future expansion. To this end, the slaughtering department, coolers, rendering facilities, etc., should be so located that they may be enlarged without adversely affecting other departments. A separate roadway not used for meat trucks should be provided for bringing in livestock in trucks to a pen section located in the rear of the plant. Features such as the inedible products tanking and fertilizer departments and catch basins for grease

recovery should be suitably located in the rear of the plant so as to avoid objectionable conditions affecting the receiving, preparation, handling, and shipping of edible product.

Separation: An establishment operating under Federal meat inspection must be completely separated from any other plant and buildings, whether used for industrial, commercial, residential, or other purposes. No communications by means of doorways, windows, stairways, elevators, or passageways, loading or unloading platforms, or loading courts are permissible.

Construction

Floors, Walls, and Ceilings: To promote good sanitation the floors, walls, and ceilings in the various workrooms should be constructed of impervious material that can be readily kept clean. Wood structures and equipment are absorbent and difficult to keep clean, and for that reason the use of wood should be restricted as much as possible. (In lieu of dressed and matched lumber, the use of marine plywood which is available in large sheets, is preferable as there are fewer joints that offer a harbor for roaches or other vermin). Floors requiring drainage should be constructed of impervious material, such as dense concrete or vitrified floor brick of good quality laid on a concrete base. Interior wall and, so far as structural considerations permit, ceiling surfaces should be smooth and flat. Wall surfaces in workrooms should be constructed of glazed brick, glazed tile, smooth portland cement plaster, or other nonabsorbent material. Ceilings should be of good height (about 10 feet or more), and to avoid damage to glass in windows from impact of hand trucks, the window sills should be 3 feet or more above the floor. Window sills should be sloped about 45° to promote sanitation.

Floors and Drainage: All parts of floors where wet operations are conducted should be well drained. A slope of about 1/4-inch a foot to drainage inlets is desirable for usual conditions. To avoid accidents, excessively smooth floors should be avoided. Good results have been obtained by laying concrete floors with a topping containing hard particles, such as carborundum, so as to afford a good foothold, or by giving them a wood float finish. Each floor drain, including blood drains, should be equipped with a deep seal trap (P-, U-, or S-shape). The drainage lines should be of metal (cast or galvanized iron pipe) having an inside diameter of at least 4 inches, provided with rodent screens and properly vented to the outside air. Drains for paunch contents should be at least 8 inches in diameter to avoid clogging. Where several 4-inch lines discharge into one drainage line, this line should be of sufficient size to quickly carry away all drainage discharged into it. Drainage lines from toilet bowls and urinals should not be connected with other drainage lines within the building and should

not discharge into a grease catch basin. Such lines should be located so that if leakage develops it will not affect product or equipment. Where there is likelihood that the water seals in traps will evaporate without replenishment from floor drainage, as in the case of dry storage rooms, the floor drains should be provided with suitable removable metal screw plugs. Floor drainage valleys about 24 inches in width and integral with the floor are required under the dressing rails for hogs, sheep, and calves. The valleys should slope at least 1/8-inch per foot to floor drains within the valleys.

Lighting: Unrefrigerated workrooms should be provided with means for furnishing adequate direct natural light and ventilation. Uncolored glass having a high transmissibility of light should be used in windows and skylights, and the glass area should approximate one-fourth of the floor area of a workroom. This ratio should be increased where there are obstructions, such as adjacent buildings, overhead catwalks, and hoists, which interfere with the admittance of direct natural light. Well distributed artificial lighting of good quality is required at all places where, or at times when adequate natural light is not available or sufficient. The over-all intensity of artificial illumination should be not less than 20 foot candles. At all places where inspections are made or where special illumination is required to enable establishment employees to properly prepare products of any character to meet the requirements of the inspection, the illumination should be not less than 50 foot candles. To reduce glare, light diffusing and heat absorbing glass (blue) may be used in skylights and windows that are subjected to considerable sunshine.

Ventilation: Adequate means for ventilation should be provided in workrooms. This may be furnished by means of ventilating-type windows and skylights or by artificial means such as a fan and duct system. In locations subject to the presence of dust and objectionable odors, such as those adjoining livestock pens, runways, etc., windows should be of the fixed type. In refrigerated rooms where a considerable number of operatives are continuously employed, as in cutting rooms and bacon slicing rooms, where natural ventilation is limited, adequate mechanical ventilation should be supplied. An adequate amount of outside air should be continuously introduced into such rooms and the fresh air intakes should be so located that the air is not contaminated with dust, smoke, etc. Such air intakes should be provided with effective filters to eliminate dust, etc., and, where indicated, a heating element for tempering the air in cold weather.

Equipment

Equipment should be constructed so that it can be readily kept clean. Excepting equipment such as cutting boards, metal equipment should be provided. Rust-resistant metal such as 18-8 stainless steel is recommended for equipment such as meat mixers; sausage stuffers; silent

cutters; curing boxes and vats; tops of sausage stuffing, boning and other tables; bacon combs; the hooks of trolleys; tracks; track hangers; and storage racks for meat and meat food products, viscera inspection pans and trucks, gambrels, etc.

Sheet metal coverings on sidewalls, posts, tops of wood tables, the inner surfaces of meat handling trucks, meat chutes, and curing and cooking containers have proved unsatisfactory from the standpoint of sanitary maintenance and are not acceptable.

Equipment wasting water, such as soaking and cooking vats, sausage stuffing tables, can sterilizers, casing preparation equipment, etc., should be installed so that waste water is delivered through an interrupted connection into the drainage system without flowing over the floor. Soaking and cooking vats should be provided with overflow pipes at least two inches in diameter. The upper end of each overflow pipe should be equipped with an open-end cleanout tee to facilitate cleaning. Stationary equipment and equipment not readily movable should be placed at least 12 inches from floors, walls, posts, and other fixed parts of the building and from other equipment to facilitate ready cleaning of outer surfaces. Vent stacks from covered cooking vats or hoods over cook tanks should be so arranged as will preclude drainage of condensate back into the vats.

A separate washroom or area should be provided for cleaning curing vats, hand trucks, utensils and containers such as boxes and trays. The room or area should have adequate direct natural light and ventilation, impervious well drained floor, impervious walls and ceiling and an exhaust fan for dispelling steam vapors.

Adequate and conveniently located hose connections for cleanup purposes should be provided throughout the plant. The use of long hoses should be avoided.

Adequate and conveniently located hand-washing facilities (lavatories) with a minimum bowl size of 16" x 16" x 9" should be provided for the use of employees and inspectors. Each lavatory should be supplied with hot and cold running water delivered through a combination mixing faucet with outlet about 12 inches above the rim of the bowl to facilitate washing arms as well as hands, liquid soap and an ample supply of sanitary towels in suitable dispensers and a suitable receptacle for used towels. Lavatories in workrooms and toilet rooms should be foot pedal operated. Sterilizers constructed of rust-resistant metal and of sufficient size for complete immersion of knives, cleavers, saws, and other implements in scalding hot water should be provided and located adjoining the lavatories and elsewhere as required. Each sterilizer should be provided with a water line, a steam line or other means of heating, an overflow, and facilities for completely emptying

the receptacle. One lavatory should be provided for every two sausage stuffing tables and so located as to be convenient to the stuffer operators. Lavatories should be directly connected to the drainage system.

Sanitary drinking fountains for the use of employees should be provided in large workrooms and in dressing rooms. If desired, they may be located at lavatories and so arranged that the overflows discharge into the bowls of the lavatories. If so located, they should be placed sufficiently high above the bowls to avoid splash onto them when the lavatories are used.

The locations of lavatories, lavatory-sterilizers, drinking fountains, and other similar features should be shown on the drawings.

Slaughtering Departments

Slaughtering departments should have adequate floor space and be arranged to facilitate the sanitary conduct of operations and the efficient performance of the inspection. Truckways over which products are conveyed from the slaughtering department to rooms such as the offal cooler, the edible products tank charging room, and the inedible products tank charging level should be located so that the material is not trucked beneath rails from which dressed carcasses and product are suspended.

The hourly rate of slaughter for each kind of animal slaughtered and whether more than one kind of animal will be slaughtered at the same time should be given on the drawings of all slaughtering layouts submitted for approval. Also, it should be stated whether animals will be slaughtered by the kosher method.

To avoid delays in slaughtering operations, pen capacity for holding the maximum number of animals of the various kinds that will be slaughtered in a single day should be provided for antemortem inspection. The pens, ramps, unloading chutes, and runways should be paved with concrete or brick and, except at gateways, have side curbs of similar impervious material 12 inches or more in height and suitable drainage facilities. Water troughs should be provided with suitable overflows and located over or adjacent to pen floor drains.

To facilitate the antemortem inspection of animals, ample natural and artificial lighting, and a suitable suspect pen and a squeeze pen for temperaturing animals should be provided. Holding and shackling pens should be located outside of or effectively separated from the slaughtering department by full-height partitions made of impervious material so as to avoid objectionable conditions due to dust and odors.

Suitable facilities should be furnished for conveying crippled animals into the slaughtering department and power-driven hoists should be provided for elevating cattle, hogs, calves, and sheep to a bleeding rail.

Adequate space and suitable and properly located facilities should be provided for separating and handling the viscera of the various species of animals slaughtered. The cattle paunch emptying table should be equipped with a power operated lift, and if paunches are saved for edible purposes, the top of the table should extend over the emptying hopper about 12 inches and the sides of the hopper should extend down vertically below the top of the table at least 3 feet, 6 inches, to avoid soiling the paunches. (See drawing on Page 51).

Prints showing desired arrangements and features relative to slaughtering facilities at establishments where Federal meat inspection is maintained, scale drawings of dressed carcasses, and a summary of principal minimum distances, some of which also appear upon the drawings, are included herewith for the information of owners and architects. Moving top viscera inspection tables and carcass conveyors motivated by a single power unit and synchronized in their movement are required where the rate of slaughter exceeds 20 hogs, calves, or sheep per hour. A flight top viscera inspection table is desired on cattle layouts having four or more dressing beds.

Slaughtering Facilities

The following should be provided in departments for slaughtering cattle, calves, sheep, and hogs:

Cattle: (1) Dry landing area at least 5 feet wide in front of the knocking pen for receiving stunned animals ejected from the pen, the area to be separately drained and sufficiently removed from the bleeding area.

(2) Curbed-in bleeding area so located that blood will not be splashed upon stunned animals lying on the dry area or upon carcasses being skinned on the siding beds.

(3) A distance of 16 feet between the vertical of the drop-offs to the pritch plate area and the vertical of the line of the hoists where carcasses are eviscerated for two bed layouts and 18 feet for three or more beds. This is needed to provide space for the evisceration of carcasses, the trucking of product, and for the inspections made at this point.

(4) Fourteen feet or more between the line of the aforementioned hoists and the header rail leading to the cooler, to provide the length of dressing rails needed for dropping hides, splitting chucks, etc., on double rail hang-off and where viscera inspection trucks are used. If hides are dropped and carcasses split at designated areas beyond the header rail, this distance may be shortened somewhat depending on the layout.

(5) At least 3 feet between the header rail and the adjacent wall for the clearance of dressed carcasses transferred on the rail.

(6) Bleeding rail with its top at least 16 feet above the floor or the metal grating over the bleeding area and dressing rails at least 11 feet above the floor.

(7) Suitable facilities and adequate floor space for flushing and washing, inspecting and storing heads on racks or trucks after removal from carcasses. (Show the details of the construction of this equipment on the drawings, see drawings herewith).

(8) Separately drained area for cleaning and disinfecting viscera inspection trucks to be located at the point where condemned material is discharged from the trucks. Area to be about 7' x 8' with impervious walls 8 feet or more in height on three sides to confine splash. Floor of the area to be pitched about 1/2-inch per foot to a drain in a rear corner.

(9) Efficient drainage facilities for the dressing beds. The pritch plate area should pitch in a plane from a high-line about 2 feet in the rear of the rumps of pritched carcasses to the edge of the pritch plates and then converge to a floor drain in front of the curb of the bleeding area. From said high-line, the floor should pitch in the other direction to a floor drain centrally located between the dressing beds and about 3 feet beyond the line of the hoists where carcasses are eviscerated. (See drawing herewith).

(10) A properly constructed hide chute near the point where hides are removed from carcasses. The chute should have a hood of substantial metal construction with a push-in door closely fitting a metal frame inclined so as to be self-closing by gravity. The hood should have a vent pipe at least 10 inches in diameter extending vertically to a point above the roof.

(11) Viscera inspection trucks should be provided with an inspection pan 24½" x 26" x 3" and the bottom of which is 34" above the floor. The bottom of the truck should be at least 14 inches above the floor.

(12) Curbed and separately drained area or an area of sufficient size sloped 1/2-inch to the foot to a floor drain should be provided where passed carcasses are washed and/or shrouded. Non-slip metal platforms should be provided for employees performing these operations.

Calves and Sheep: (1) Bleeding rail with its top at least 11 feet above the floor. If sheep only are handled in the bleeding section, the height of the bleeding rail may be less (about 9 feet).

(2) Dressing rails of such height that gambrels or leg hooks from which carcasses are suspended are 7' 3" above the floor or inspector's platform.

If calves are slaughtered by the kosher method, space for removal of heads before carcasses dressed with the skins on are washed and for the placement of the removed heads on a head truck for conveyance to the place of viscera inspection is required. An unobstructed route for conveying the heads to the point of inspection should be provided.

(3) Adequate space along the rail for skinning legs and for skinning and removing calf heads before carcasses are transferred from shackles to gambrels. (The transfer point and the places where the principal dressing operations are performed should be indicated on the drawings). When calves are dressed over a layout using a moving carcass conveyor, combination viscera and head inspection table, and are suspended sufficiently high to prevent contamination of the head by contact with the floor or splash therefrom, the head skinning, removal, flushing and washing should be deferred until the carcass reaches the point adjacent the charging end of the inspection table.

(4) Proper facilities for washing the skins of calf carcasses before making incisions, except the sticking wounds, if carcasses are dressed with the skins on.

(5) Suitable facilities for flushing, washing, inspecting, and storing calf heads.

(6) Facilities for the inspection of viscera, on layouts where the rate of slaughter is less than 20 calves or sheep per hour, consist of a hoppered metal stand of the proper size to accommodate one inspection unit of two pans. The large pan for the inspection of abdominal viscera should be 24" x 36" x 3" and the small pan for thoracic viscera (or heads if calf heads are placed on the table for inspection) should be 12" x 36" x 3". The pans should be so located that they do not interfere with the movement of the inspector and eviscerator alongside the stand. The pans should have handles or hand-holes for their convenient removal and a perforated bottom with the holes about 1/4-inch in diameter, three inches on center. If calves are dressed on the layout, the smaller pan should be provided with a suitable device for holding the head immobile in an upright position for inspection (see drawing on Page 42). If only sheep are dressed on the layout, the pans may be reduced to 24" x 24" x 3" and 12" x 24" x 3". A conveniently located receptacle (sterilizer) should be provided for sterilizing the inspection pans. The height of the stand to be such that the bottoms of the pans are about 34 inches above the floor when in use in the stand. Stand to be directly connected to the drainage system through a deep seal trap or waste pipe to discharge directly into a floor drain. The stand when in use to be placed with its end holding the smaller pan at right angles to the dressing rail and its end about 2 feet from the vertical of the rail, measured horizontally.

(7) Drip valley 24 inches wide beneath the dressing rail from the bleeding area to the point where viscera inspection is completed.

(8) Calves of such size that there is not a clearance of at least 8 inches above the drip valley when suspended from the dressing rail or whose viscera is of such size that it is not readily transferred manually and unaided by the eviscerator from the carcasses to the inspection stand are not to be dressed on a dressing rail but skinned and eviscerated as cattle on the cattle dressing beds. (Notation covering this should be placed on the drawings.

(9) Suitable facilities for washing unopened sheep carcasses after removal of pelts and for washing the internal surfaces, breasts, and necks of calf and sheep carcasses after completion of inspection.

Hogs: (1) The following equipment and operations should be located in an area or areas separated from the carcass dressing room except for the necessary openings for the passage of carcasses and for access: scalding vat and gambrelling table; dehairing machine located within a curbed area having non-clogging drainage inlet; gambrelling table; facilities for dipping carcasses in a rosin mixture as a depilatory aid (if installed); and singeing operations.

(2) Adequate space and facilities for the proper conduct of operations and the efficient performance of the inspection with facilities arranged so that it is not necessary to truck or otherwise convey product through a line of carcasses suspended from the dressing rails.

(3) A drip valley 24 inches wide and integral with the floor, pitched to properly located drainage inlets in the valley. The drip valley should extend from the point where carcasses leave the gambrelling table to the point where carcass inspection is completed. The floor may be pitched to drain to the drip valleys.

(4) Shaving rail of adequate length and a carcass washer of the cabinet type have separate drainage facilities. A carcass washer should be located at a point beyond completion of shaving operations and before the head dropper's station.

(5) A rail layout for a maximum rate of 20 an hour arranged so that one inspector may perform all the necessary inspections. A hoppered metal stand identical to the equipment described on Page 11, Paragraph (6), and illustrated on Page 42 should be provided for the inspection of viscera and heads. If hogs only are dressed on the layout, the pans may be 24" x 30" x 3" in size. For layouts having a slaughter rate exceeding 20 hourly, see drawings in the latter portion of this booklet.

(6) The scalding vat should be constructed of metal. The following minimum lengths are recommended for the rates of slaughter indicated: 75 per hour, 20 feet; 150 per hour, 40 feet; 300 per hour, 60 feet; and 600 per hour, 90 feet.

Horses: The construction requirements and facilities are essentially the same as for cattle with the exception of rail heights, clearances, and removal of hide (see Page 28). Provision should be made for the removal of the hide so as to avoid contamination of the carcass, adjacent area and product.

Other Requirements

The cooler facilities should have ample capacity for the volume of slaughtering conducted. Cooler rails should be spaced at least 2 feet from walls, columns, refrigerating equipment, and other fixed parts of the buildings. The type of refrigeration should be indicated, and, if wall coils are installed, a drip gutter of concrete or other impervious material integral with the floor and properly connected with the drainage system should be provided beneath the coils. If overhead refrigerating facilities are installed, insulated drip pans properly connected to the drainage system should be placed beneath them. Floor-type refrigerating units should be placed within curbed and separately drained areas unless located adjacent to floor drains. Walls of coolers should be of impervious material and of such construction that they will not be damaged by the impact of hand trucks. The tops of cooler rails above the highest part of the floor should be at least 11 feet for halves of beef, 9 feet for hog carcasses with heads removed and calves (trolleys 12 inches long), and 7' 2" for quarters of beef. Sheep carcasses should be suspended so that the hooks or gambrels are at least 6' 6" above the floor.

Suitable compartments should be provided in coolers for holding retained carcasses or parts and retained products. The compartments may be separated from the remainder of the cooler by partitions of rust-resistant wire screen, number 9 gauge, one-inch mesh, or flat expanded metal of approximate gauge and mesh, extending from about 2 inches above the floor to the ceiling. The compartment should have a door of similar material at least 4 feet wide, equipped for sealing or locking with a M. I. S. padlock. If it is desired to save cattle carcasses retained for refrigeration on account of infestation with cysticercus bovis, a similar compartment for holding such carcasses in a freezer at a temperature not higher than 15° F. for at least 10 days should be provided.

Suitable facilities for holding edible organs and parts (offal) under refrigeration in a separate cooler or in a separately drained part of a carcass cooler are required.

It is desirable that doorways through which product is transferred on rails or in hand trucks be at least 5 feet wide.

Stairs should be of concrete or metal with solid treads and closed risers and have side curbs of similar material 6 inches in height measured at the front edge of the tread.

Elevator platforms should be at least 6' 6" x 7' 6".

Truckways should be unobstructed passageways having a minimum width of 5' 0" and no overhead storage rails. When truckways are in coolers having overhead rails, and along the wall, a horizontal distance of 7' 0" should be provided between the wall and the vertical of the nearest rail. Truckways should be clearly designated on the drawings.

Working surfaces of tables and other equipment should be not more than 34 inches above the floor where employees stand on the floor to conduct operations. Tables and equipment having higher working surfaces should be provided with suitable metal foot platforms or attached metal platforms upon which employees may stand.

All tables or other equipment having water on the working surface should be provided with turned up edges. The height of the turned up edge depends on the volume of water used and operations conducted. In no instance should the turn up be less than one inch.

Beef boning and trimming, pork cutting, sausage chopping and mixing, and similar operations should be conducted in departments having a temperature not higher than 50° F.

Bacon slicing and packaging of consumer-style packages of perishable product should be conducted in departments having a temperature not higher than 60° F.

An incubation room for incubating samples of fully processed canned meat product should be provided in a suitable location. The room should be of adequate size for holding not less than one percent of fully processed canned product from each run of each retort for at least 10 days. The temperature in the room should be maintained by thermostatic control at approximately 98° F. and the room provided with a recording thermometer. The sensitive elements of the thermostat and recording thermometer should be below the bottom shelf. The shelves should be made of expanded metal or heavy gauge wire mesh. The floor in the room should be pitched to a floor drain equipped with a removable metal screw plug. The door of the room should be equipped for locking with a M. I. S. padlock.

Concrete paved areas, properly drained and extending out at least 20 feet from buildings, loading docks, or livestock chutes and platforms should be provided at places where vehicles are loaded or unloaded.

Railroad track gutters with suitable drainage should be provided where refrigerated railroad and livestock cars are loaded and unloaded. The top of the gutter should be below the bottom of the railroad ties unless the entire track area is paved.

Color changing tags for attachment to retort baskets containing canned product being placed in the retorts for processing should be provided in plants conducting canning operations.

Well arranged and adequate facilities for handling and rendering inedible and condemned material should be provided at slaughtering plants. Inedible products departments must be separate and distinct from those used for edible products, except that the tank charging room of the inedible products rendering department is allowed one connecting doorway provided with a solid, self-closing door completely filling the opening from the slaughtering or viscera separating departments. The arrangement of the inedible products tankhouse should be such that material is mechanically elevated to an upper level and gravitated to rendering units on a lower level. At least two rendering units should be provided for the prompt disposal of condemned and inedible material in case of the breakdown of one of the units. If rendering facilities are not provided, it is required that condemned material be denatured and held in water-tight metal containers in a suitable inedible products room pending daily removal to a rendering plant. Permission to convey such material over public streets and highways should be obtained from the State and local authorities having jurisdiction in such matters.

Waste material such as paunch contents, hog hair, blood, and pen manure must be disposed of without creating objectionable conditions, and the drawings or specifications should indicate how this will be accomplished.

Every practicable precaution should be taken to keep official establishments free of flies, rats, mice and other vermin. Rat-proof construction is recommended as an effective means of preventing infestation. Control of roaches is in a large degree dependent upon structural conditions. Therefore, types of construction which do not offer hiding places and harbors for them are highly desirable.

Catch basins for the recovery of grease should be suitably located and not placed near edible products departments or areas where edible products are unloaded from or loaded onto vehicles. To facilitate ready cleaning, such basins should have inclined bottoms and should be without covers. They should be constructed so that they can be completely emptied of their contents for cleaning, and hose connections for furnishing hot water for cleanup purposes should be provided at convenient locations near the basins. The area surrounding an outside catch basin should be paved with impervious material such as concrete and provided with suitable drainage facilities. Suitable facilities, such as a blow tank, for the transfer of grease to the point of disposal, after it is skimmed from the basins, should be provided.

Welfare Rooms: Well located and properly separated toilet and dressing room facilities are required for employees of each sex. The number of employees using each dressing room should be given on the drawings. Each employee should be provided with a metal locker at least 15" x 18" x 60". To permit ready cleaning beneath the lockers, they should be raised about 16 inches above the floor on legs or other suitable

supports. The lockers should have sloping tops. To maintain orderliness and to permit of ready cleaning of the floor under the lockers, it is desirable to provide a loose wood plank seat about 12 inches wide in front of and below the doors of the lockers. The aisle width between the removable wood seats should be 5 feet. Lockers set against a wall should be so installed that a metal back is not necessary. Lockers back to back should have a single back between them.

Suitable shower bath facilities should be provided in the locker rooms (not in toilet rooms). The shower bath should have an 8-inch high curb of impervious material unless it is entered through an individual dressing room that has the floor sloped to drain into it.

Dressing rooms must be separated from adjoining toilet rooms by tight, full-height walls or partitions. A toilet room should not be entered directly from a workroom, but through an intervening dressing room or toilet room vestibule. Toilet rooms, dressing rooms, and toilet room vestibules should have solid, self-closing doors completely filling the doorway openings. Water closets should be provided in sufficient number for the employees using them (at least one unit for 25 men or 20 women). A sufficient number of modern type hand-washing basins (lavatories) are required in welfare rooms, and such rooms, particularly at plants where slaughtering operations are conducted, should be provided with suitable shower bath facilities. The floors of toilet rooms and dressing rooms should be of impervious material and pitched about 1/8-inch per foot to properly located floor drainage facilities. If stall-type urinals are installed, a step-up of concrete or other impervious material sloped to drain into the urinal should be provided. If the urinals are of the wall-type, floor drains should be provided immediately beneath such fixtures. Inside toilet rooms should be provided with an entrance door from the locker room having a grilled area in the lower section. The toilet room should then be provided with a positive exhaust to the outside air that operates 24 hours daily.

It is desirable to have separate welfare facilities for employees of the hide cellar, inedible products department, etc.

Dressing rooms, toilet rooms, and toilet room vestibules should have means for furnishing abundant direct natural light and good ventilation.

Adequate lunching facilities consisting of tables and chairs (or benches), a lavatory, and drinking fountain should be provided for plant employees where plant cafeterias or nearby eating places are not available.

Inspector's Office: A well located inspector's office at least 7' 0" x 9' 0" is required at each official establishment. The office should be located so that it is not entered through a company office or employees' welfare facilities, and it should be supplied with suitable furniture,

including a desk and chairs, a metal clothing locker for each Government employee, a metal cabinet equipped for locking for the storage of supplies, and lavatory facilities. Shower bath facilities should be furnished in the inspector's quarters, particularly at establishments where slaughtering operations are conducted. Adequate separate toilet room and dressing room facilities should be provided in the inspector's quarters at establishments of such size that the assignment of several inspectors is required.

- - - - - - - - - - - - - - - -

The foregoing covers some of the principal construction and equipment requirements of the Federal Meat Inspection Service. This information is subject to change as found necessary, due to developments in methods, equipment, etc. Widely varying conditions are met in designing meat packing plants and, therefore, it is not practicable to furnish complete information for owners, architects and engineers. If further information is desired, please communicate with the Washington office of the Meat Inspection Service.

SUGGESTED NOTATIONS OR SPECIFICATIONS TO ACCOMPANY DRAWINGS
OF SLAUGHTERING PLANTS COVERING DESIRED FEATURES
SOME OF WHICH SHOULD BE ALSO SHOWN ON THE DRAWINGS
(Subject to Variations Because of Differences in Projects)

BUILDING CONSTRUCTION

1. Portland cement plaster is to be used wherever the words "Cement Plaster" or the letters "P. C." appear on the drawings.

2. All walls are surfaced with an impervious material as indicated on the drawings for each room or area.

3. All floors having drainage facilities are of brick or concrete and sloped about 1/4-inch per foot to floor drains. Floors where operations are conducted have a non-slip surface.

4. Ceilings are smooth and flat and have a smooth, impervious surface as indicated on the drawings for each room or area. If there are exposed joists or rafters in the ceilings, they are of dressed lumber and are spaced 36 inches c. to c. or more.

5. Dressed lumber is used for all exposed interior woodwork.

6. All exposed wood surfaces are painted with a good grade of oil paint or treated with hot linseed oil or a clear wood sealer.

7. All window and door openings and other openings that would admit flies are provided with effective insect screens. Also, effective means are provided to preclude rodents from entering buildings.

8. Glass in windows and skylights has a high transmissibility of light. Effective measures, such as the use of heat absorbing glass, glass block, or monitors and sawtooth skylights with sash facing north are taken to avoid objectionable heat and glare from the sun's rays during the summer season in workrooms.

9. Rails are placed not less than 2 feet from walls, posts, and other fixed parts of the building.

10. Two retaining compartments constructed of rust-resistant number 9 gauge wire partitions or expanded metal of approximate gauge, about one-inch mesh, extending from about 2 inches above the floor to the ceiling, are provided as indicated on the drawings. The doors of these compartments are of similar material and are equipped for locking with a M. I. S. padlock or seal. One compartment is for holding retained carcasses and product in a cooler and the other is for holding carcasses affected with cysticercus bovis at a temperature not higher than 15° F. for at least 10 days.

11. All doors of toilet rooms and dressing rooms and toilet room vestibules are solid, self-closing and completely fill the openings.

12. All inside window ledges are sloped about 45°.

13. Doorways through which product is transferred on rails or in hand trucks are at least 5 feet wide.

14. Suitable coves to facilitate sanitary maintenance are provided at junctions between walls and floors.

15. Glass blocks used in wall panels, etc., have smooth exposed surfaces.

16. Stairs are of impervious material having solid treads, closed risers and side curbs 6 inches high measured at the front edge of the step.

17. The livestock pens are paved with impervious material, such as concrete or brick, and pitched to suitable drainage facilities. Curbs of impervious material, such as concrete, at least 12 inches high are provided around the borders of the livestock pen area, except at entrances, to confine liquids and material. A suitable suspect pen and squeeze pen are provided in locations shown on drawings. Good artificial lighting for the performance of antemortem inspection at times when there is insufficient daylight is provided in the livestock pen area. Well located hose connections are provided for the cleanup of the livestock pens.

18. Floor openings for chutes, etc., and for stairways except at entrances have curbs of impervious material, such as concrete or metal, at least 12 inches high to exclude floor drainage.

19. Effective means, such as expanded metal or wire with a mesh not exceeding 1/2-inch embedded in the walls and floors at their junctions and extending vertically and horizontally an adequate distance, or other effective means, are provided to exclude the entrance of rats and other rodents into rooms.

WATER SUPPLY, PLUMBING, DRAINAGE AND REFRIGERATION

1. The potable water supply is obtained from (indicate source of supply, e. g. wells, City of _____, etc.), and is effectively protected from pollution.

2. An ample supply of hot water at adequate temperature and under suitable pressure and properly distributed throughout the plant is provided. Hose connections for supplying hot and cold water are provided in the various workrooms at the approximate locations shown on the drawings. The hot water of at least 180° F. at hose outlets is supplied for cleaning slaughtering, inedible and similar departments and for disinfecting equipment such as cattle viscera

inspection, inedible and other trucks. A thermometer having an easily read scale is provided on the common water line at the place where viscera trucks are cleaned and disinfected.

3. Only clean and not recirculated water is used in the hog dehairer. (This applies to small installations. In large installations, clean water is required in the last 6 feet of the dehairer).

4. Each lavatory (hand-washing basin) is supplied with hot and cold water delivered through a combination mixing faucet with outlet about 12 inches above the rim of the bowl, liquid soap and an adequate supply of sanitary towels in suitable dispensers, and a suitable receptacle for used towels. Lavatories are pedal operated.

5. Sanitary drinking fountains are provided in the slaughtering and processing departments and in the dressing rooms. If placed adjoining a lavatory, they are located high enough to avoid splash from the lavatory.

6. All equipment wasting water is installed so that waste water is delivered into the drainage system without flowing over the floor.

7. Effective means are taken to prevent back-siphonage of liquids into the potable water supply or steam lines. Back-siphonage of liquids into potable water supply is prevented by placing water lines to equipment, such as cooking or soaking vats and the like, higher than the highest level reached by liquids in the vats, etc. Steam lines are provided with suitable vacuum breakers.

8. The sewage from the plant is disposed of by discharging it into the city sewer system (furnish description of facilities if other method of disposal is employed).

9. Toilet soil lines are separate from house drainage lines to a point outside of the building and by-pass the grease catch basin. (If there is one at the plant).

10. Floor drainage lines inside buildings are of metal and have an inside diameter of at least 4 inches, properly vented to the outside air to a point above the roof, and are equipped with deep seal traps. All floor drains and vent lines are provided with facilities to exclude rodents.

11. Discharge lines for paunch contents are of cast iron or steel pipe at least 8 inches in diameter and discharge into a sump from which the material is pumped to an elevated tank for dewatering. The tank is so constructed that the solids can be discharged directly into a water-tight truck for removal from the plant. The paunch contents are removed daily or oftener as may be necessary and are

disposed of in such a manner as not to create a nuisance or other objectionable condition. The construction of the dewatering tank is shown on a detail drawing and the area adjoining the tank where the truck stands during loading is paved with concrete and provided with suitable drainage facilities. A hose connection for supplying hot water for cleanup is provided nearby. The capacity of the dewatering tank is sufficient for holding the paunch contents derived from the maximum daily slaughter of cattle. At least $2\frac{1}{2}$ cubic feet capacity per animal is provided.

12. Blood drains are provided with long neck deep seal traps properly vented to a point above the roof.

13. Blood is discharged into a metal receiving tank and transferred by gravity or a pump or blow line (to a metal truck for removal from the plant) (to processing equipment in the plant). Use appropriate statement.

14. The grease catch basin is constructed so that it can be completely drained of its contents for cleaning daily and is without cover for ready inspection. Grease skimmed from the basin is (placed in water-tight containers and promptly removed from the plant) (blown to inedible processing equipment in the plant). Use appropriate statement. A hose connection for supplying hot water for cleaning the basin and adjacent area is provided in a convenient location. The area around the basin is paved with concrete and provided with drainage facilities. The construction of the basin is shown on detail drawing.

15. Heat to dispel steam and vapor is provided in unrefrigerated workrooms.

16. Refrigerated rooms are maintained at a temperature not higher than 50° F.

17. The coolers are refrigerated by means of (give types and locations of refrigeration units). Overhead refrigerating units have insulated drip pans beneath them, properly connected to the drainage system. Floor-type refrigerating units are placed within curbed and separately drained areas unless located adjacent to floor drains. Wall refrigerating coils have drip gutters of impervious material, such as concrete, beneath them, properly connected to the drainage system.

EQUIPMENT

1. All stationary equipment not readily movable is placed not less than 12 inches from floors, walls, and ceilings and other stationary equipment to facilitate ready cleaning of outer surfaces.

2. All equipment except cutting boards of boning tables and the like is of rust-resistant metal construction and so constructed that it can be readily kept clean.

3. Chutes for the transfer of product are so constructed that they can be readily cleaned (long chutes, due to difficulty of cleaning, should be avoided). Chutes are round in shape or otherwise have well rounded corners. Chutes leading from edible to inedible products departments are effectively hooded and vented.

4. Cooking vats and like equipment are provided with overflow pipes at least 2 inches in diameter having open-end cleanout tees at their upper ends and are connected to the drainage system by means of interrupted drains. Valves on drainage lines leading from such equipment are located adjacent point where line is connected to equipment.

5. A suitable room or space and facilities for washing gambrels, beef hooks, trolleys, etc., are provided in a convenient location as shown and an exhaust fan is installed in an outside wall for dispelling steam.

6. The hog scalding vat is constructed of metal.

7. Eviscerators' and openers' platforms are constructed of suitable metal grating and of a type that can be readily cleaned (not subway type grating).

8. The pans of the moving top viscera inspection table are constructed of stainless steel or similar rust-resistant metal (pan sizes are given on drawings). The guard rail is omitted from the section of the viscera inspection table opposite the eviscerator's station. A suitable pan sterilizer is provided at the proximal end of the table. The sterilizer is without bottom and the sides extend upward from about 2 inches above the floor. The sterilizing chamber is provided with a vent pipe to the outside air at least 10 inches in diameter. A thermometer with its sensitive element in the hot water line as it enters the sterilizer and with temperature recording scale located so that it can be readily observed by the inspector working alongside the viscera inspection table is provided. A floor drain is provided beneath the sterilizer and the area in which the viscera inspection table is located has separate drainage. Cold water sprays are provided at the proximal and distal ends of the table. The movement of the viscera inspection table is synchronized with the movement of the carcass conveyor. The viscera inspection table is driven by a shaft and worm drive and the carcass conveyor and the viscera inspection table are motivated by the same drive. A stop button for controlling the movement of the carcass conveyor and the viscera inspection table is provided in a location convenient for use by the inspector.

9. Booths for flushing and washing cattle heads and calf heads, similar to the equipment shown in "Information for Applicants for Federal Meat Inspection", are provided. All horns and horn butts and pieces of skin are removed from cattle and calf heads before they are flushed and washed. Horns, horn butts and pieces of pelt are removed from sheep heads before carcasses are washed after pelting if the heads are saved for edible purposes.

10. The paunch emptying table is constructed of metal and the end of the table overhangs the emptying hopper about 12 inches to avoid soiling the cut and serous surfaces of paunches. The sides of the hopper extend vertically below the top of the table at least 3 feet, 6 inches, and then converge to a discharge opening at least 8 inches in diameter. (See detail drawing).

11. Edible offal is placed on cages with removable metal drip pans beneath or on suitable trucks provided with similar drip pans and conveyed to the offal cooler. If packed in the cooler, suitable facilities including a table and lavatory are provided.

12. Suitable mechanical equipment is provided for transferring condemned soft material to metal containers or hasher and washer without manual handling of the condemned product.

13. The rendering units and driers in the inedible products rendering department are equipped with effective condensers to suppress objectionable odors. Rendering units are equipped for M. I. S. sealing.

14. Revolving-type smokehouses are provided with suitable facilities for complete cleaning with a detergent solution and rinsing with clean hot water.

15. The cages or trees used for smoked meats and sausage are so designed that there is a clearance of at least 12 inches between the product and the floor of the smokehouses and hanging rooms. The type and size of this equipment is illustrated by detail drawings on Sheet ___ (insert correct sheet number of submitted drawings).

16. Smoke-making equipment and ducts are so located that all outer surfaces can be readily cleaned.

17. Color changing tags are provided to attach to retort baskets to identify product that has been retorted.

18. A suitable room or separately drained area is provided for washing hand trucks, boxes, trays, demountable parts of sausage stuffing equipment, etc. Two suitable compartments with entrance rails are provided for washing smokehouse cages and trees. The first compartment is used for washing cages and trees with a detergent solution and the second for rinsing this equipment with clean water to remove all detergent solution. The washing compartment has a suitable exhaust duct extending to a point outside of the building.

19. An incubation room for incubating samples of fully processed canned meat product is provided as shown on the drawings. The room is of adequate size for holding not less than one percent of fully processed canned product from each run of each retort for at least ten days. The temperature in the room is maintained by thermostatic control at approximately 98° F. and the room provided with a recording thermometer. The shelves are made of expanded metal. The sensitive elements of the thermostat and recording thermometer are below the bottom shelf. The floor in the room is pitched to a floor drain equipped with a removable screw plug. The door of the room is equipped for locking with a M. I. S. padlock or seal.

20. A suitable rust-resistant metal table with top about 3' x 5' is provided in an unobstructed space in a cooler for holding returned product for inspection.

21. Each employee is provided with a metal locker at least 15" x 18" x 60", having a sloping top and with bottom elevated on legs about 16 inches long. Removable wood seats about 12 inches wide are provided in front of and below the doors of the lockers. The dressing room will be used by not more than (give number of employees and sex).

22. Clothing lockers have effective means for ventilation, such as doors having louvered openings of adequate size or doors constructed of expanded metal or heavy wire mesh.

23. The inspector's office is provided with a suitable desk and chairs and two metal lockers of at least the size provided for employees, one with hooks for clothing and the other with shelves for supplies. Each of these lockers is equipped for locking.

24. A suitable room or space for the storage of supplies, such as wrapping paper, cartons and containers, is provided in a convenient location as shown. All supplies are placed on racks 12 inches above the floor.

OPERATIONS

1. The hourly rates of slaughter are: (give rates for each species).

2. Animals are not slaughtered by the Kosher method (if only non-Kosher slaughtering).

3. Hides are not spread for inspection in the slaughtering room.

4. Calf heads are removed from carcasses before they reach the point of transfer (if carcasses are gambrelled approximately 7' 3" above the floor), flushed and washed in the equipment shown on the drawings, and placed on the facilities for inspection as shown on the layout provided.

5. Calves of such size that the viscera cannot readily be transferred manually and unaided by the eviscerator from carcasses to the viscera inspection pan are not slaughtered on the calf inspection layout. Large calves are skinned and eviscerated as cattle on the cattle slaughtering beds.

6. Udders are not saved for edible product (if saved, show the facilities for handling and inspecting them and provide duplicate tags to identify with corresponding carcasses).

7. Duplicate tags are provided and used to identify cattle and/or calf heads with corresponding carcasses.

8. Pieces of meat are washed individually in running water and not in batches.

9. Hog hair is removed from the slaughtering room in water-tight metal containers at the end of the day's operations and (removed from the plant in a water-tight metal truck and disposed of in such manner as to not create objectionable conditions such as fly breeding or odors) (conveyed to suitable equipment for processing in the plant). Use appropriate statement.

10. Condemned and inedible material is transferred to the inedible products department in suitable water-tight metal containers (for processing therein) (and removed from the plant daily, or oftener if deemed necessary by the inspector in charge, to an outside rendering plant for disposal). Use appropriate statement. Suitable facilities for washing the containers used for such materials are provided in the room.

11. Animals found dead on the premises are disposed of by prompt removal (to a rendering plant) (to inedible products rendering department at the establishment). Use appropriate statement.

12. Empty cans are washed in an inverted position with water having a temperature of at least 180° F. immediately before filling.

13. Retorts are charged by (describe means). Retorts drain into curbed and drained areas or pits or are connected to the drainage system by interrupted drains.

14. Boning, cutting, and similar operations are conducted in departments having a temperature of approximately 50° F.

15. Vegetables are stored in bulk in a suitable separate room and are handled so as to avoid dissemination of dust. Suitable facilities for the preliminary preparation of vegetables for use in product are provided in a location separate from the processing area.

16. Sawdust is conveyed to and ashes removed from smokehouses in metal containers having tight fitting lids (when necessary to go through processing departments).

GENERAL

1. Each workroom and compartment is provided with artificial lighting of good quality having an intensity of at least 20 foot candles for general illumination and at least 50 foot candles at places where inspections are performed and where plant operations require establishment employees to properly prepare products of any character to meet the inspection requirements.

2. Outer clothing of employees, shroud cloths, etc., are laundered at (the plant laundry) (an outside laundry). Use appropriate statement.

3. Roadways on the premises adjoining the plant are hard surfaced and have a binder of asphalt, tar or cement and are properly drained.

S U M M A R Y
PRINCIPAL MINIMUM DISTANCES
(Rail heights are measured from top of rail to highest part of floor)

Cattle Slaughtering Departments

Description	Vertical Distances
Bleeding rail (distance from rail to point of application of shackle to shackled foot - 48")	16' 0"
Dressing rails (trolley length - 15")	11' 0"
Beef cooler rails (trolley length - 15")	11' 0'
Rails for beef in quarters (trolley length - 15")	7' 2"
Moving equipment - Heights of conveyor rails, platforms, top of viscera inspection table, etc.	See dimensions on attached drawings
Description	**Horizontal Distances**
Dry area in front of knocking pen	5' x 8'
Curb of bleeding area to pritch plates (no header rail)	5' 0"
Line of drop-offs to line of half hoists (2 beds)	16' 0"
Line of drop-offs to line of half hoists (3 beds or more)	18' 0"
Line of half hoists to header rail leading to cooler	14' 0"
Between header rail and carcass washing rail, if parallel	6' 0"
Between header or washing rails and wall of slaughtering room	3' 0"
Between center lines of dressing beds	8' 0"
Between pairs of dressing rails	4' 0"
Between moving top table and dressing rail at inspector's platform	5' 6"
Area for sterilizing viscera inspection truck	7' x 8'

Calf and Sheep Slaughtering Departments

Description	Vertical Distances
Bleeding rails for calves (distance from top of rail to point of application of shackle to shackled foot - 30")	11' 0"
Bleeding rails if only sheep are slaughtered	9' 0"
Gambrels or leg hooks from which calf or sheep carcasses are suspended to floor or inspector's foot platform	7' 3"
Cooler rails, calf carcasses	Gambrels 7' 3" above floor
Cooler rails, sheep carcasses on logs	Hooks of logs 6' 6" above floor
Moving equipment	See attached drawings
Description	**Horizontal Distances**
Vertical of rail to edge of viscera inspection stand	2' 0"
Length of rail from point of evisceration to point where carcass inspection is completed	6' 0"

Hog Slaughtering Departments	
Description	Vertical Distances
Bleeding rail to sticker's platform	10' 6"
Extension of bleeding rail to top edge of scalding vat	9' 0"
Dressing rails	11' 0"
Gambrels (suspending carcasses) to floor (12" trolleys)	10' 0"
Distances from rail to bottoms of inspection pans and various foot platforms	See dimensions on attached drawings
Rails in coolers for hog carcasses with heads removed (12" trolleys)	9' 0"
Rails in coolers for carcasses with heads attached (12" trolleys)	10' 0"
Description	Horizontal Distances
Vertical of dressing rail to various foot platforms and widths of platforms	See dimensions on attached drawings

Horse Slaughtering Departments	
Description	Vertical Distances
Bleeding rail	18' 0"
Dressing rails (trolley length 15")	12' 6"
Cooler rails (" " ")	12' 6"
Cooler rails for carcasses in quarters	8' 6"
Description	Horizontal Distances
Line of drop-offs to line of half hoists	17' 0"
Clearance between walls, posts, etc., and adjoining rails in slaughtering rooms and coolers	2' 6"
Curb of bleeding area to pritch plates	6' 0"
Dry landing area (minimum)	5'x 8'

General	
Description	Vertical Distances
Rails for sausage cages, etc.	7' 6"
Description	Horizontal Distances
From verticals of rails in slaughtering rooms, coolers, etc., to walls, posts and other fixed parts of the building	2' 0"
From vertical of conveyor rails for sausage cages to stuffing tables	5' 0"
From vertical of carcass rails to edge of boning or cutting table	5' 0"
Width of doors through which carcasses are railed or product conveyed in hand trucks	5' 0"
Truckways - unobstructed width	5' 0"

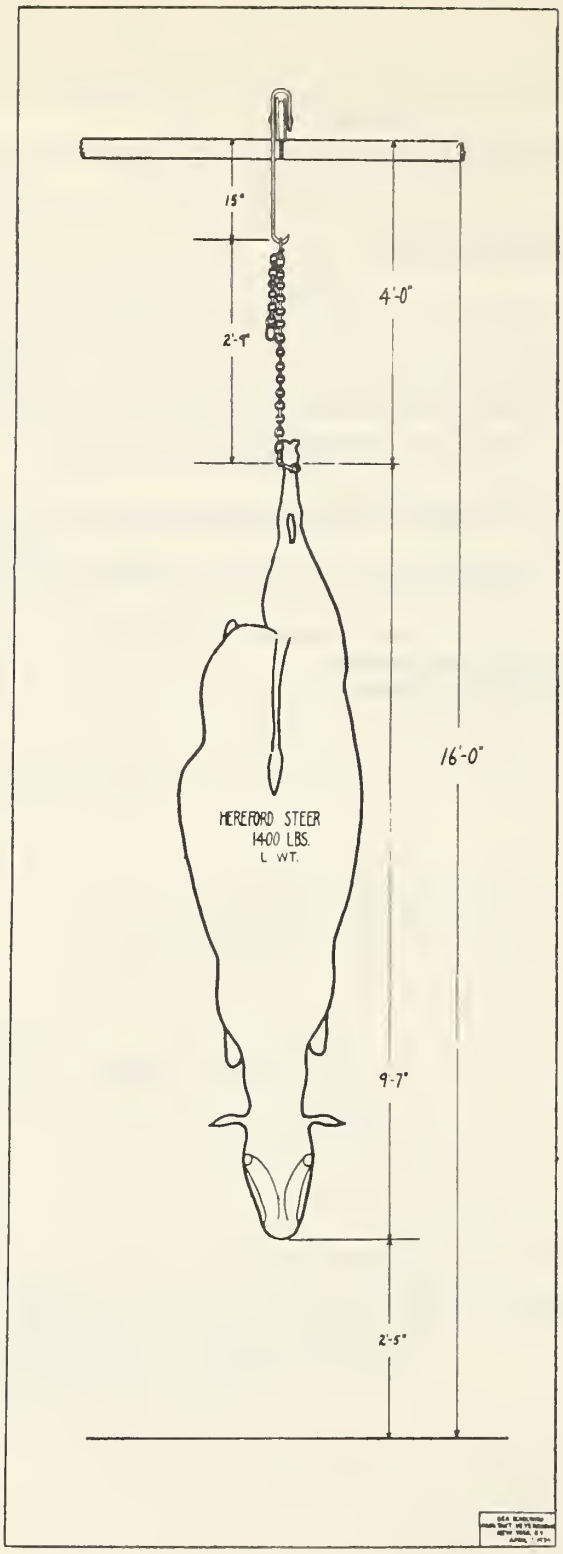
15"
2'-9"
4'-0"
16'-0"
HEREFORD STEER
1400 LBS.
L WT.
9'-7"
2'-5"

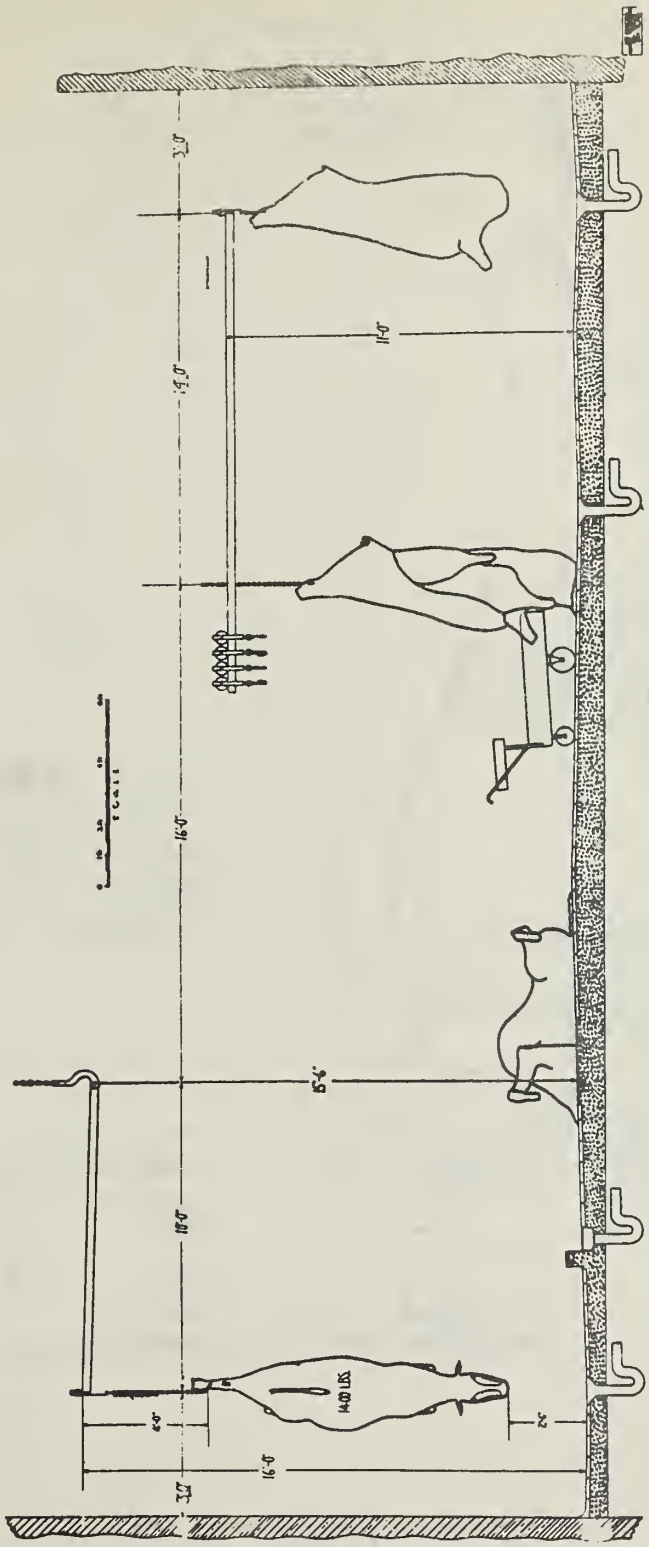
3'-0"
14'-0"
16'-0"
18'-0"
11'-0"
15'-6"
4'-0"
16'-0"
3'-0"
2'
440 LBS
SCALE

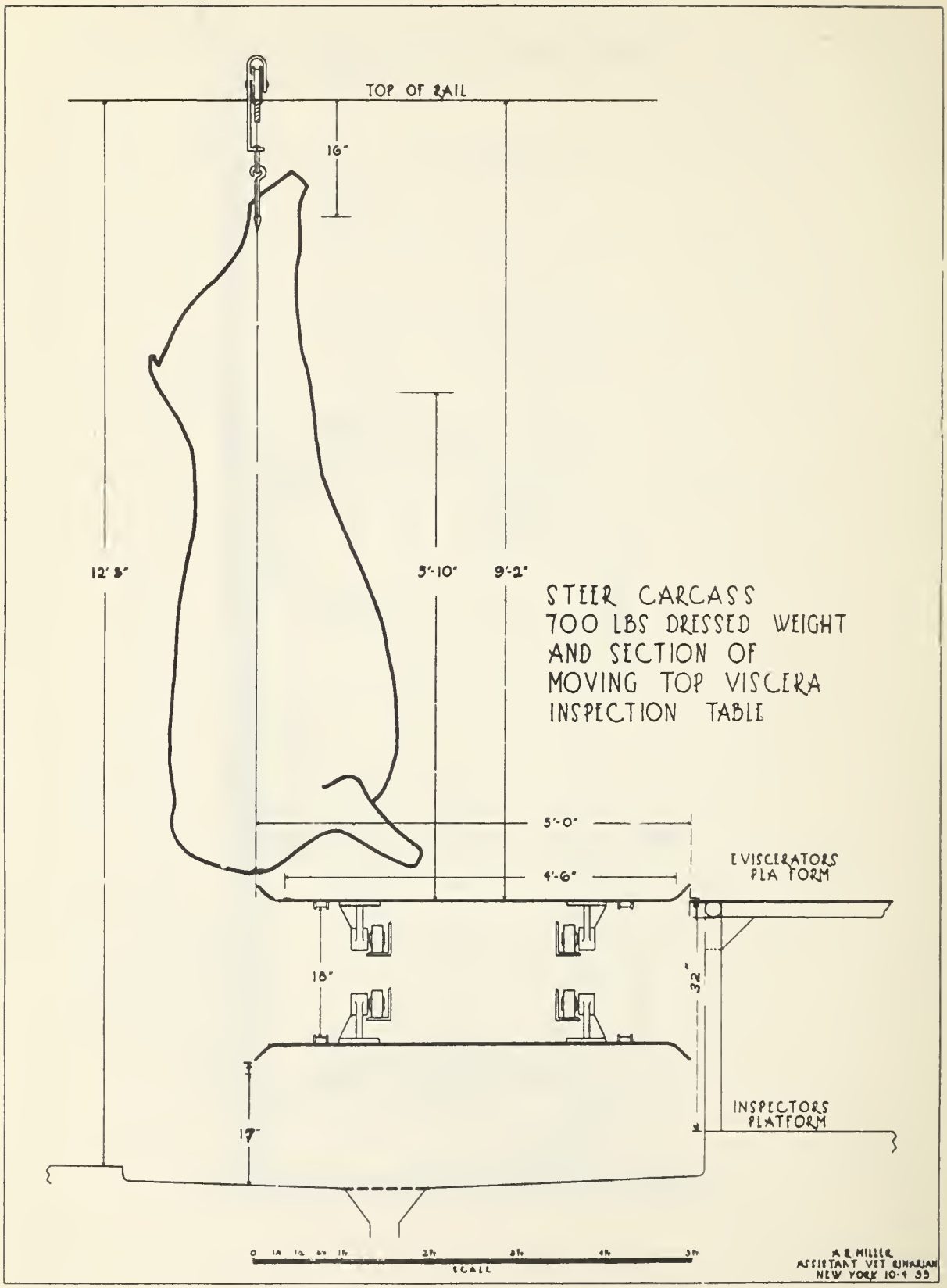
TOP OF RAIL
16"
12' 8"
5'-10"
9'-2"
STEER CARCASS
700 LBS DRESSED WEIGHT
AND SECTION OF
MOVING TOP VISCERA
INSPECTION TABLE
5'-0"
4'-6"
EVISCERATORS
PLATFORM
18"
32"
17"
INSPECTORS
PLATFORM
SCALE
A.R. MILLER
ASSISTANT VET QUARTERMASTER
NEW YORK 10-4 55

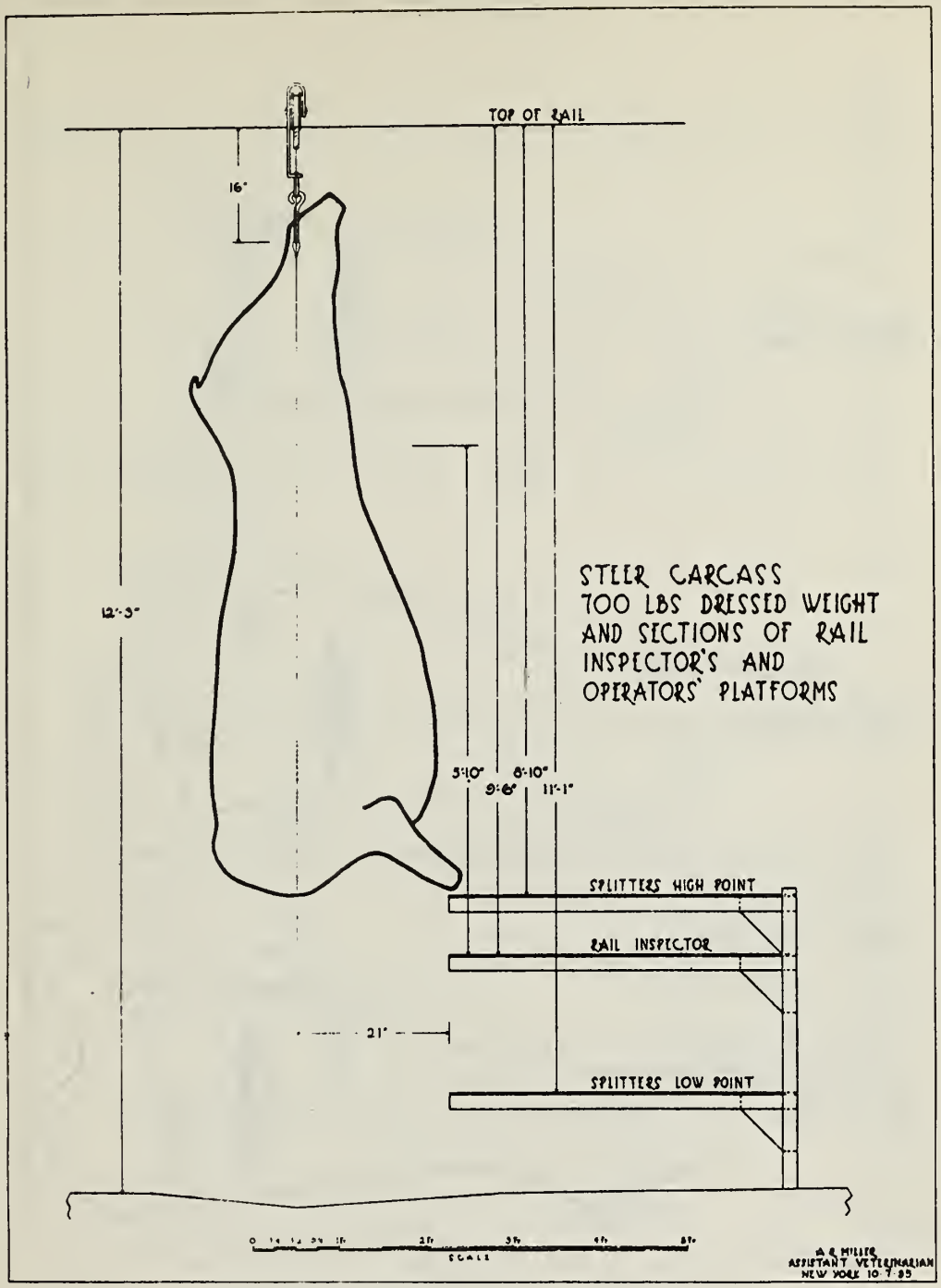
TOP OF RAIL
16"
12'-3"
STEER CARCASS
700 LBS DRESSED WEIGHT
AND SECTIONS OF RAIL
INSPECTOR'S AND
OPERATORS' PLATFORMS
5'-10"
8'-10"
9'-6"
11'-1"
SPLITTERS HIGH POINT
RAIL INSPECTOR
21"
SPLITTERS LOW POINT
SCALE
H. R. MILLER
ASSISTANT VETERINARIAN
NEW YORK 10-7-85

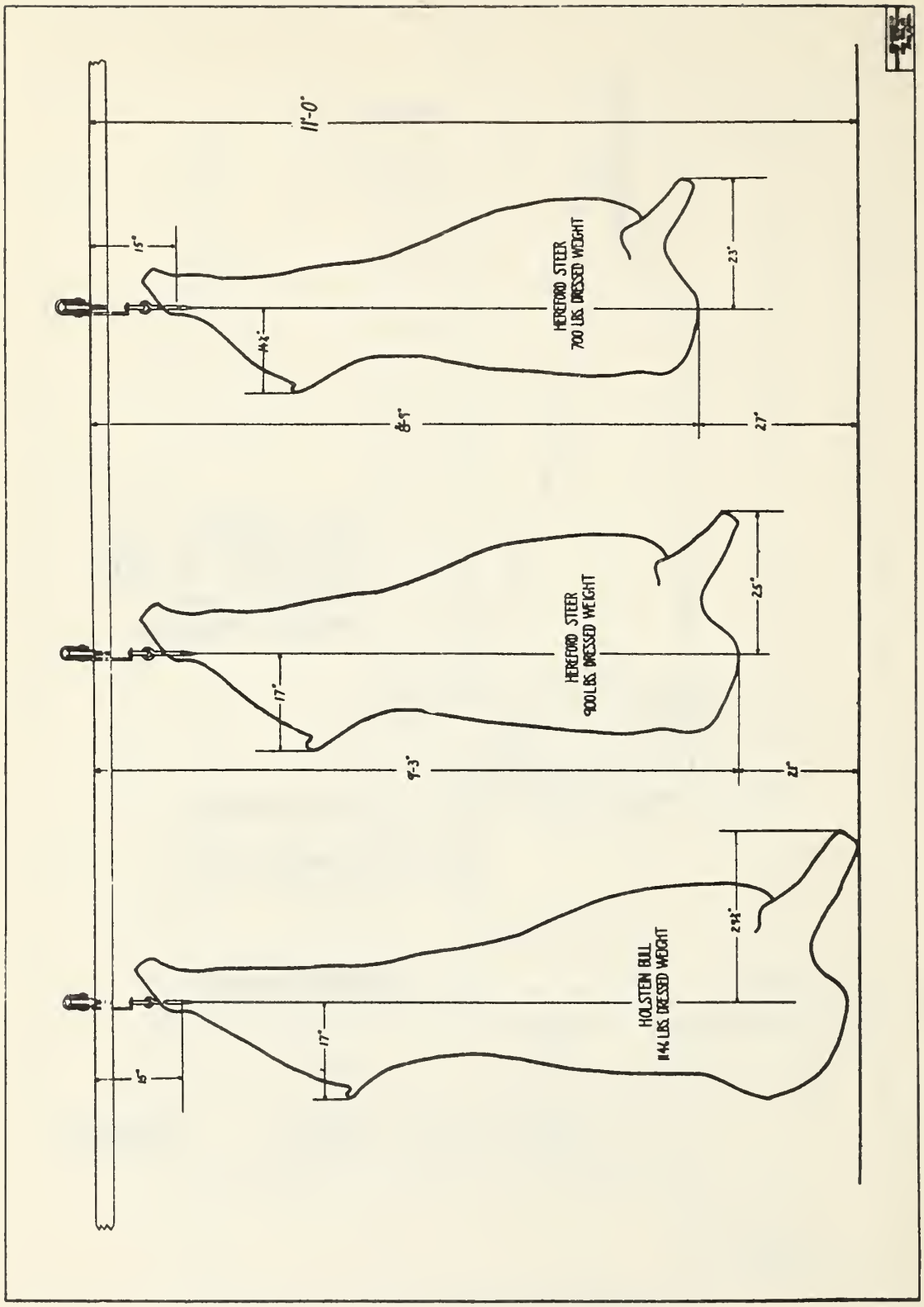
11'-0"
15"
44"
HEREFORD STEER
700 LBS. DRESSED WEIGHT
23"
8'-5"
27"
17"
HEREFORD STEER
900 LBS. DRESSED WEIGHT
25"
9'-3"
21"
15"
17"
HOLSTEIN BULL
1144 LBS. DRESSED WEIGHT
29½"

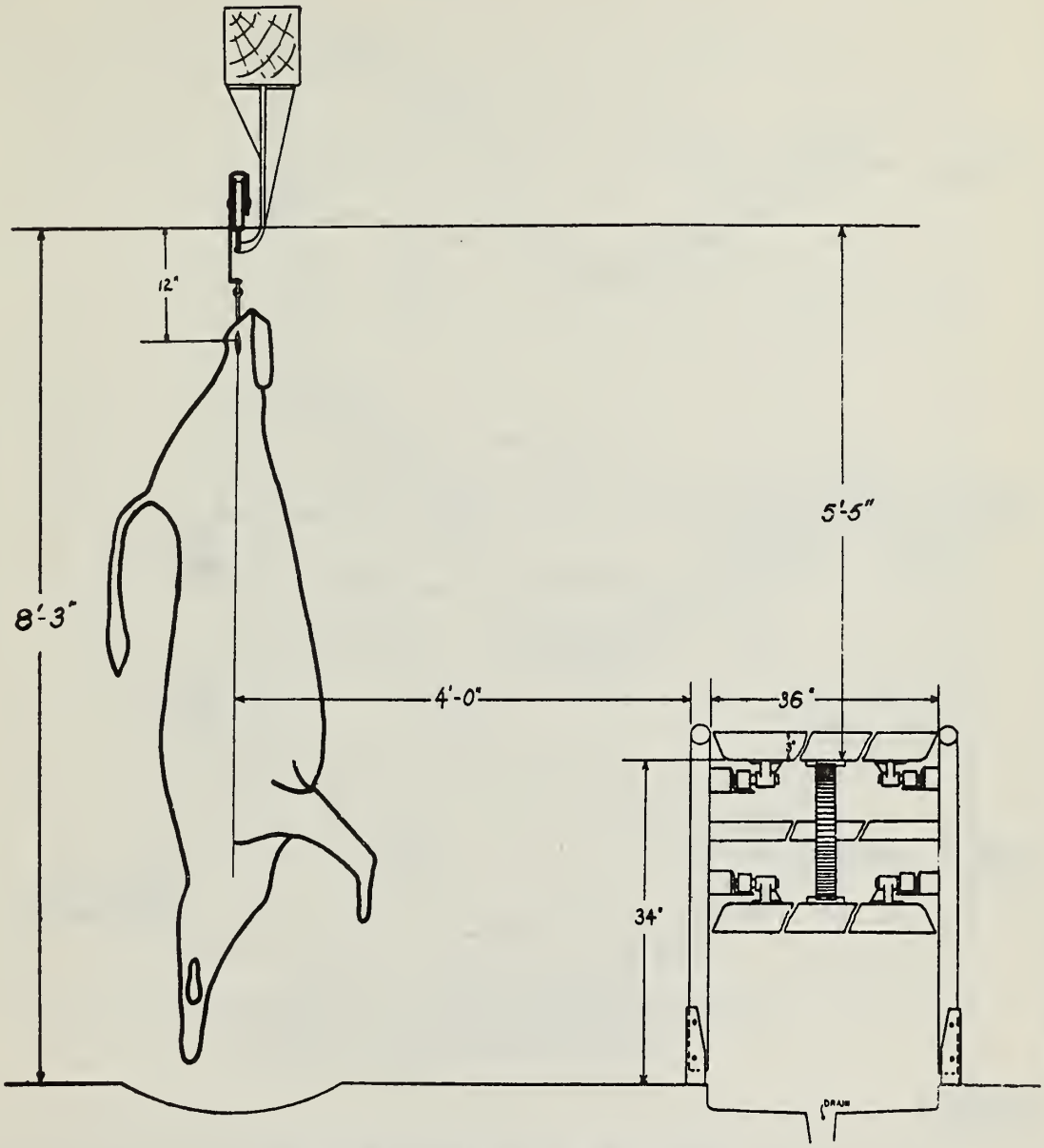

DRESSED CALF CARCASS 150 LBS. AND SECTION OF MOVING-TOP VISCERA INSPECTION TABLE.

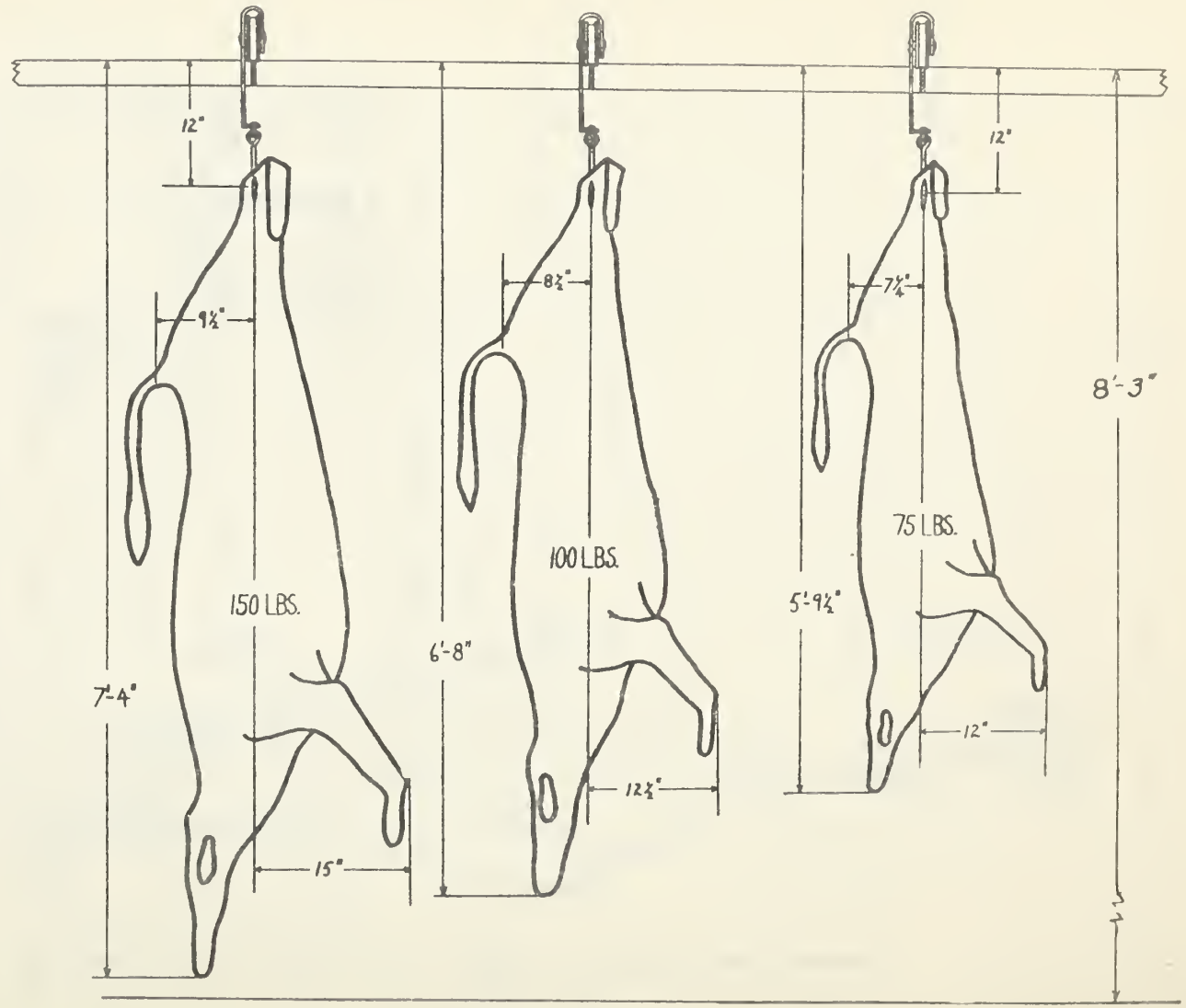

DRESSED CALF CARCASSES

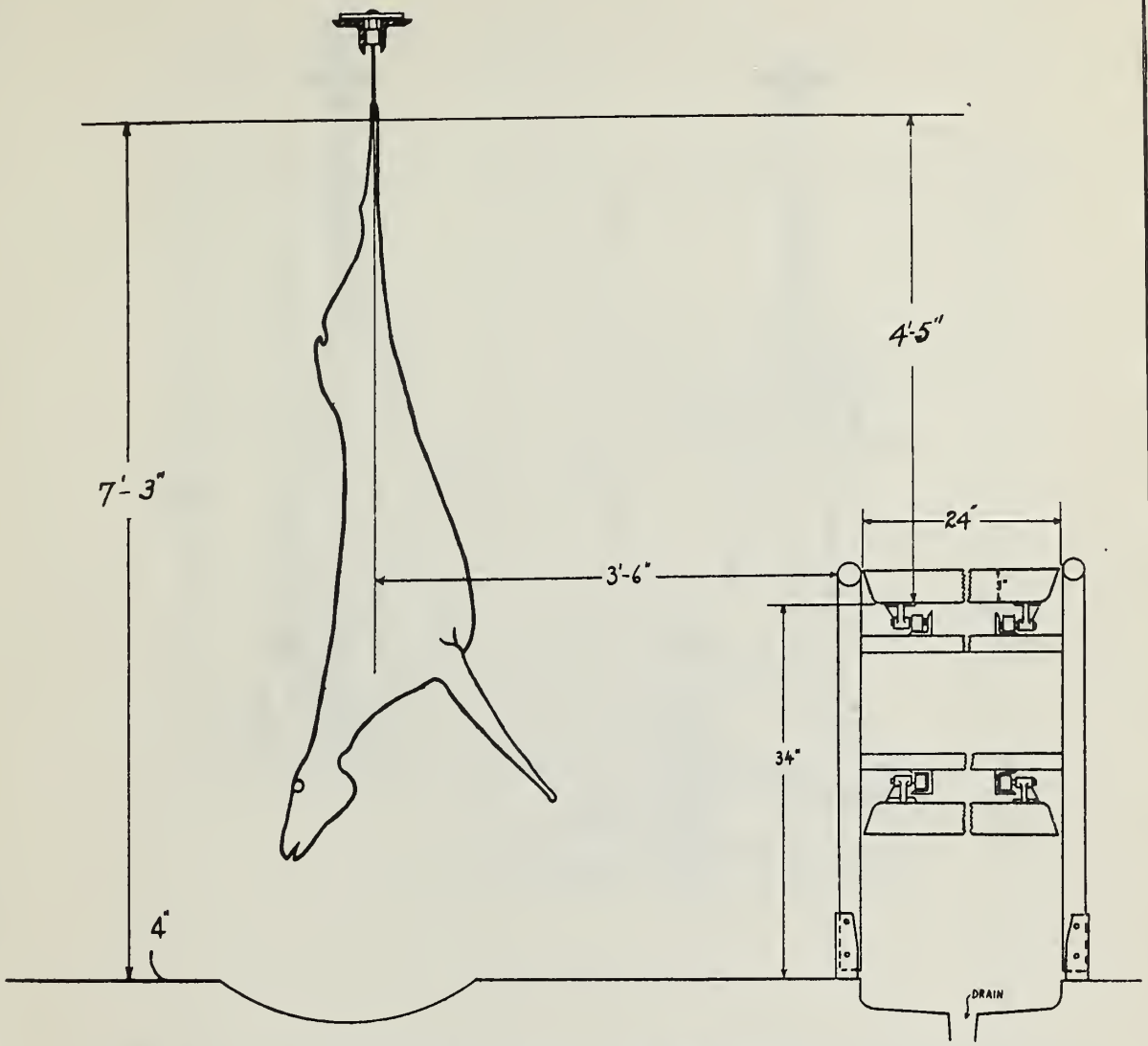

DRESSED SHEEP CARCASS 80 LBS. AND SECTION OF MOVING-TOP VISCERA INSPECTION TABLE.

GEO. SCHWARZ
ASSISTANT VETERINARIAN
NEW YORK, N.Y.
APRIL 12, 1934

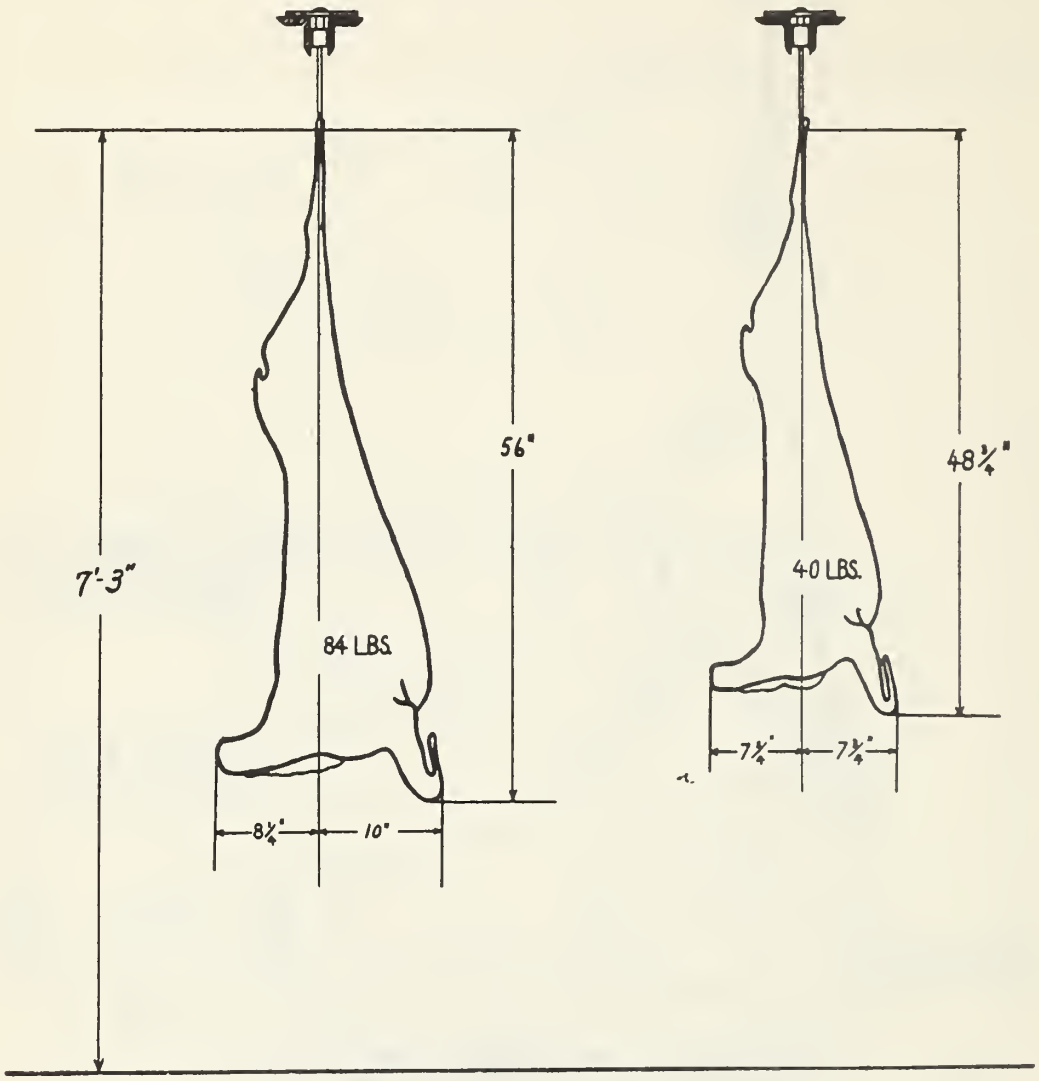

DRESSED SHEEP AND LAMB CARCASSES

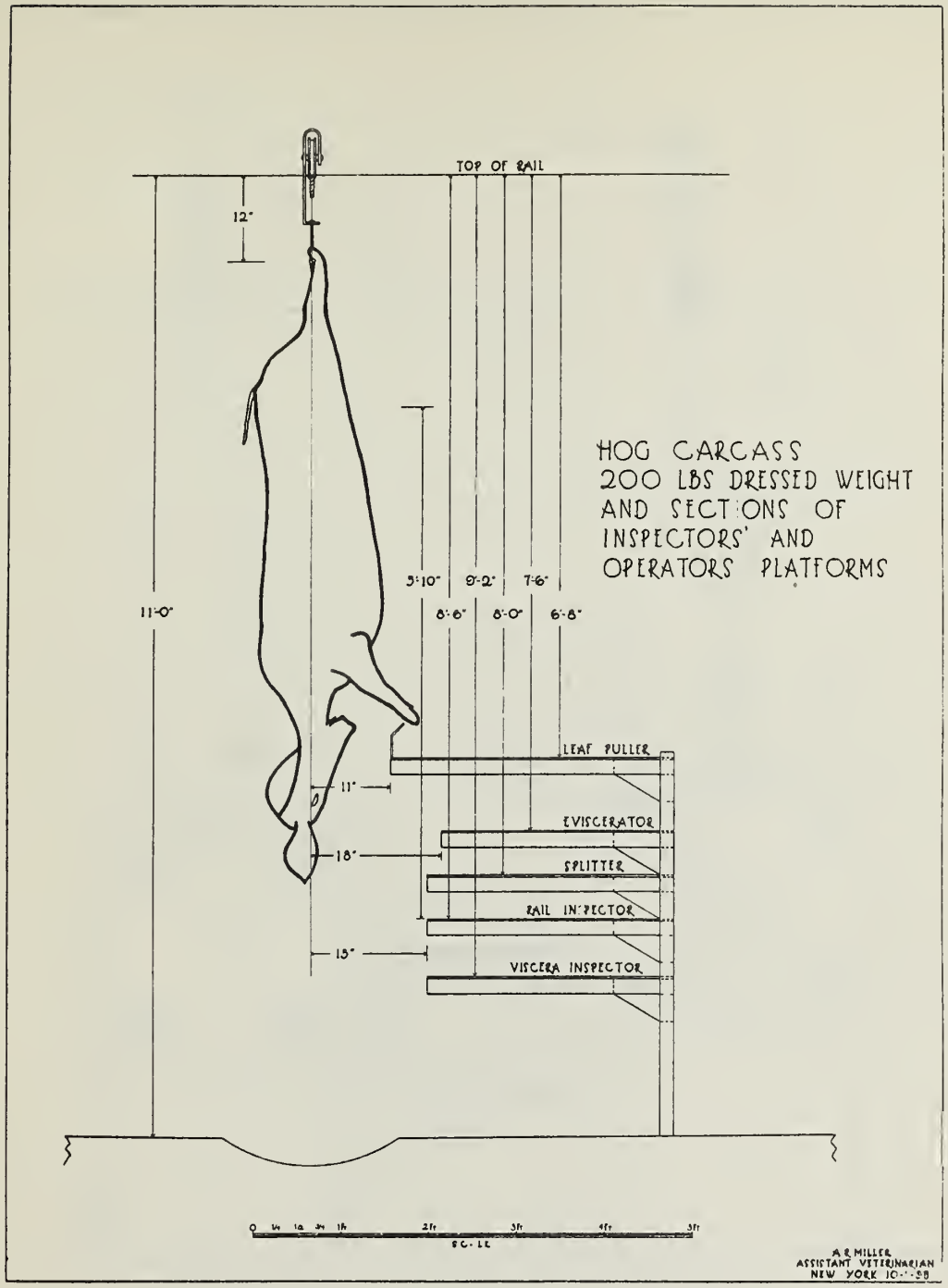
TOP OF RAIL
12"
11'-0"
5'-10"
9'-2"
7'-6"
8'-6"
8'-0"
6'-8"
HOG CARCASS
200 LBS DRESSED WEIGHT
AND SECTIONS OF
INSPECTORS' AND
OPERATORS PLATFORMS
LEAF PULLER
11"
EVISCERATOR
18"
SPLITTER
RAIL INSPECTOR
15"
VISCERA INSPECTOR
SCALE
A.R. MILLER
ASSISTANT VETERINARIAN
NEW YORK

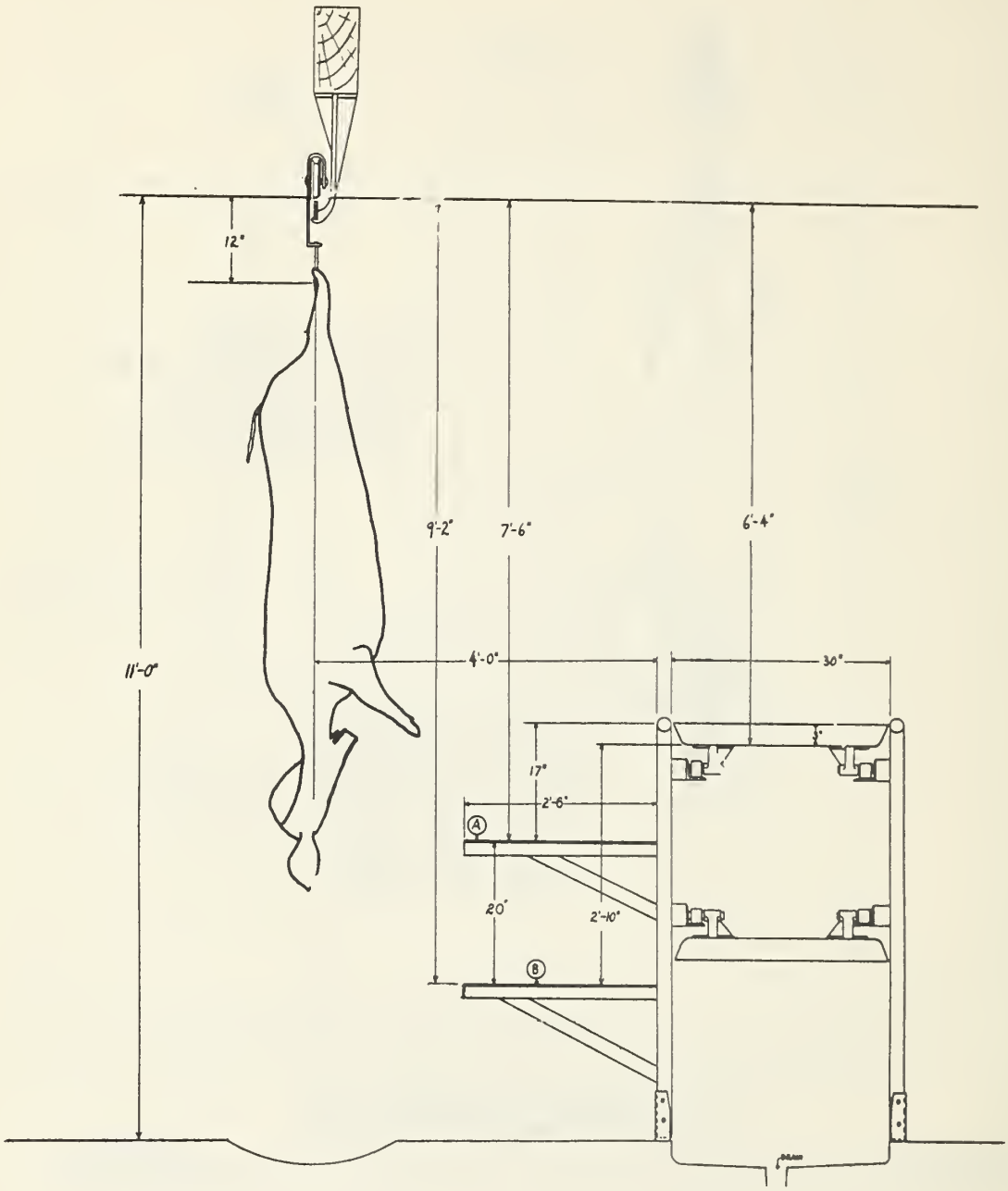

HOG CARCASS 200 LBS. DRESSED WEIGHT AND SECTION OF MOVING-TOP VISCERA INSPECTION TABLE. (A) EVISCERATOR'S PLATFORM
(B) INSPECTOR'S PLATFORM

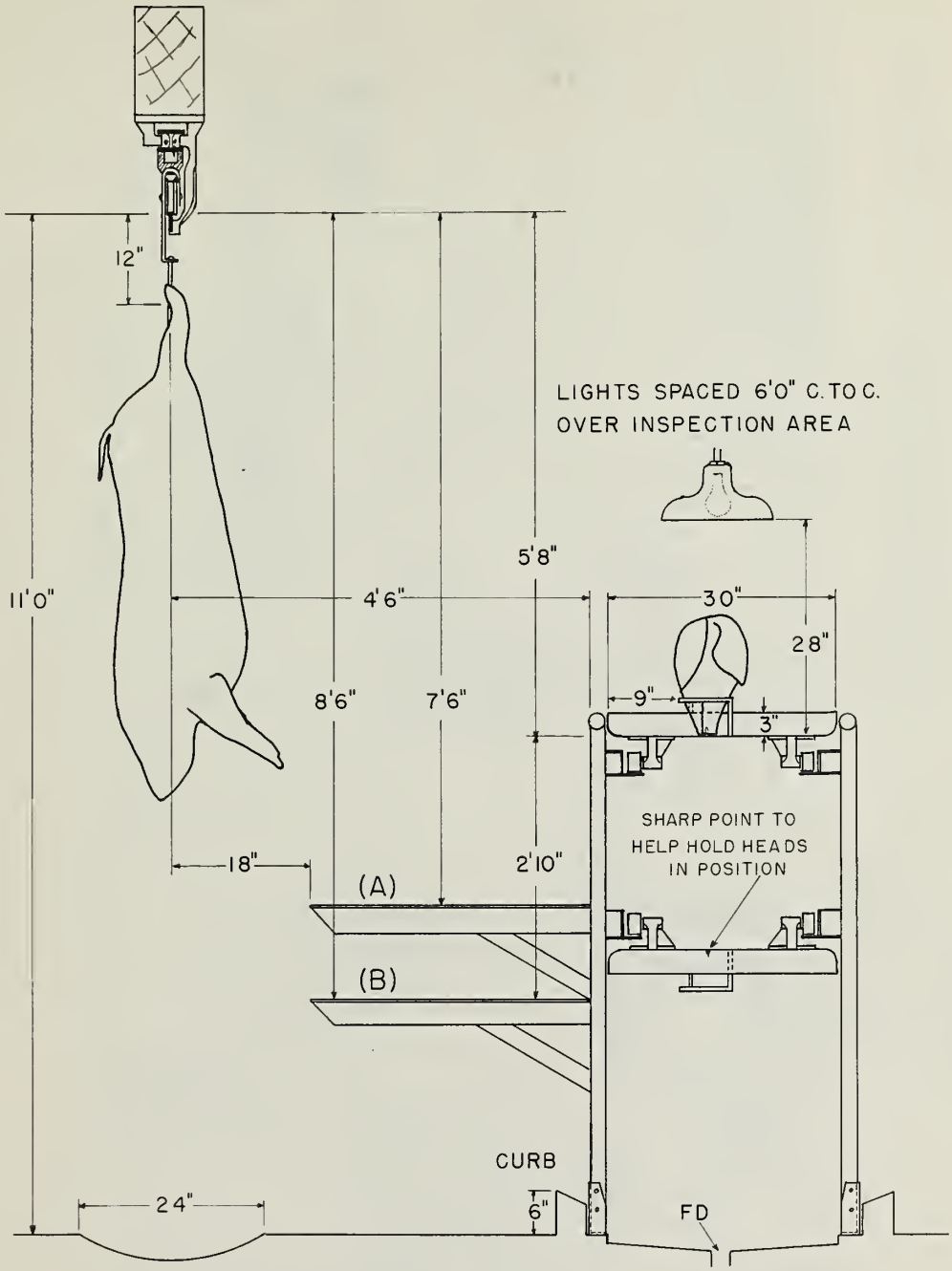

HOG CARCASS 200 LBS. DRESSED WEIGHT
AND SECTION OF MOVING-TOP VISCERA INSPECTION TABLE
SHOWING HOG HEAD IN SMALL PAN

(A) EVISCERATOR'S PLATFORM
(B) INSPECTOR'S PLATFORM

J.T.J.
2-29-52

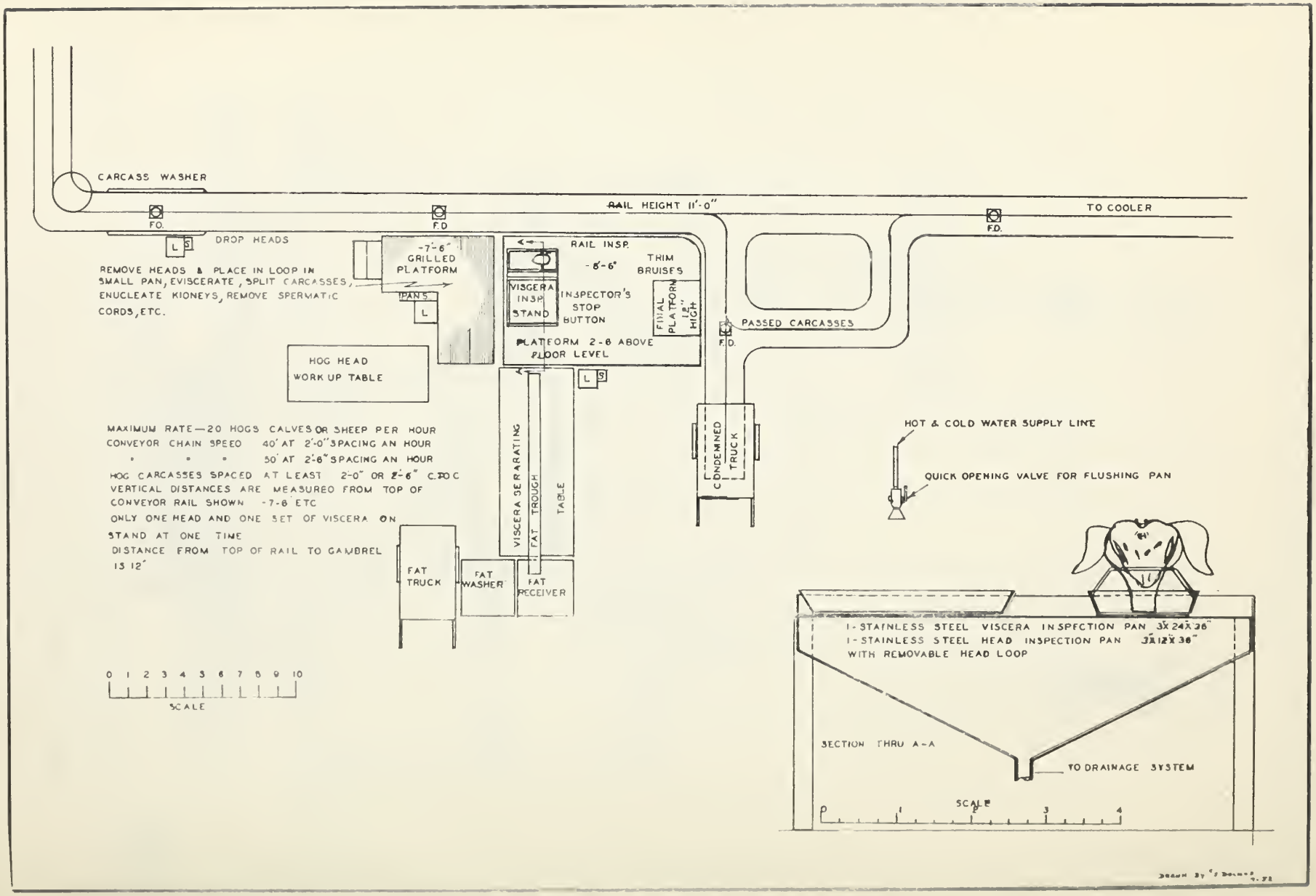
CARCASS WASHER
RAIL HEIGHT 11'-0"
TO COOLER
F.D.
F.D.
F.D.
F.D.
DROP HEADS
L S
REMOVE HEADS & PLACE IN LOOP IN SMALL PAN, EVISCERATE, SPLIT CARCASSES, ENUCLEATE KIDNEYS, REMOVE SPERMATIC CORDS, ETC.
-7'-6" GRILLED PLATFORM
PANS
L
RAIL INSP.
-8'-6"
TRIM BRUISES
VISCERA INSP. STAND
INSPECTOR'S STOP BUTTON
FINAL PLATFORM 12" HIGH
PLATFORM 2-6 ABOVE FLOOR LEVEL
PASSED CARCASSES
HOG HEAD WORK UP TABLE
L S
VISCERA SEPARATING TABLE
FAT TROUGH
CONDEMNED TRUCK
HOT & COLD WATER SUPPLY LINE
QUICK OPENING VALVE FOR FLUSHING PAN
MAXIMUM RATE—20 HOGS CALVES OR SHEEP PER HOUR
CONVEYOR CHAIN SPEED 40' AT 2'-0" SPACING AN HOUR
" " " 50' AT 2'-6" SPACING AN HOUR
HOG CARCASSES SPACED AT LEAST 2'-0" OR 2'-6" C. TO C
VERTICAL DISTANCES ARE MEASURED FROM TOP OF CONVEYOR RAIL SHOWN -7-6 ETC
ONLY ONE HEAD AND ONE SET OF VISCERA ON STAND AT ONE TIME
DISTANCE FROM TOP OF RAIL TO GAMBREL IS 12"
FAT TRUCK
FAT WASHER
FAT RECEIVER
0 1 2 3 4 5 6 7 8 9 10
SCALE
1-STAINLESS STEEL VISCERA INSPECTION PAN 3"X 24"X 36"
1-STAINLESS STEEL HEAD INSPECTION PAN 3"X 12"X 36"
WITH REMOVABLE HEAD LOOP
SECTION THRU A-A
TO DRAINAGE SYSTEM
SCALE
0 1 2 3 4

SLAUGHTER RATES

HOGS & CALVES 20-75 PER HOUR
SHEEP 20-100 PER HOUR
LENGTH OF VISCERA INSPECTION TABLE 20'0"
SIZE OF PANS LARGE 24" x 36" x 3" — SMALL 12" x 36" x 3"
CARCASSES SPACED 3' C TO C

DISTANCES

TOP OF RAIL TO BOTTOM OF INSPECTION PANS-5' 8"
VERTICAL OF RAIL TO INSPECTION TABLE 4'6"
VERTICAL OF RAIL TO EDGE OF ALL FOOT PLATFORMS 18"

RAIL HEIGHT ABOVE HIGH POINT OF FLOOR 11'

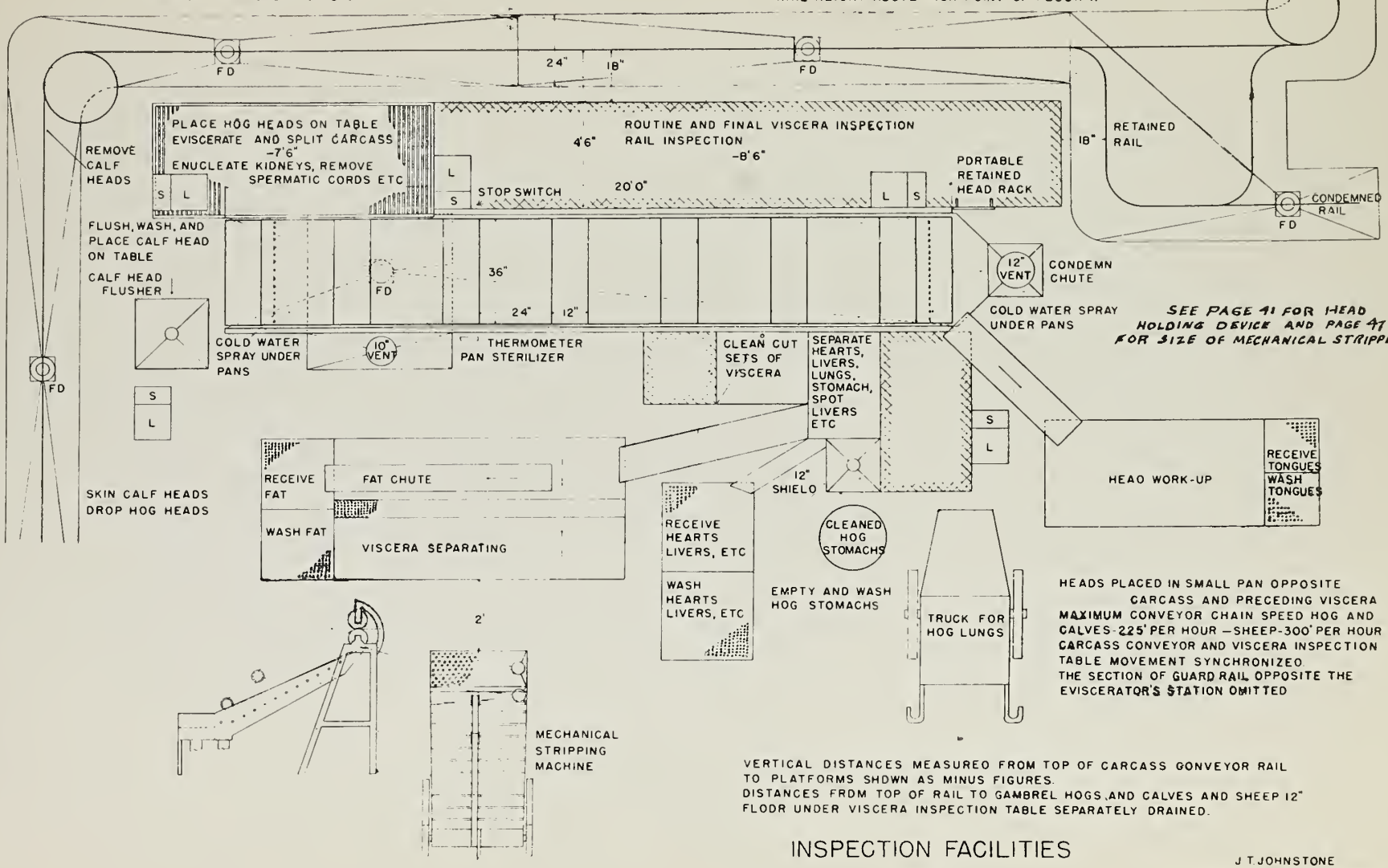

HEADS PLACED IN SMALL PAN OPPOSITE CARCASS AND PRECEDING VISCERA
MAXIMUM CONVEYOR CHAIN SPEED HOG AND CALVES-225' PER HOUR — SHEEP-300' PER HOUR
CARCASS CONVEYOR AND VISCERA INSPECTION TABLE MOVEMENT SYNCHRONIZED
THE SECTION OF GUARD RAIL OPPOSITE THE EVISCERATOR'S STATION OMITTED

VERTICAL DISTANCES MEASURED FROM TOP OF CARCASS CONVEYOR RAIL TO PLATFORMS SHOWN AS MINUS FIGURES.
DISTANCES FROM TOP OF RAIL TO GAMBREL HOGS, AND CALVES AND SHEEP 12"
FLOOR UNDER VISCERA INSPECTION TABLE SEPARATELY DRAINED.

INSPECTION FACILITIES FOR HOGS, CALVES & SHEEP

REVISED 10-30-48

J. T. JOHNSTONE
ASSISTANT TO THE CHIEF
WASHINGTON D.C.
3-1-47

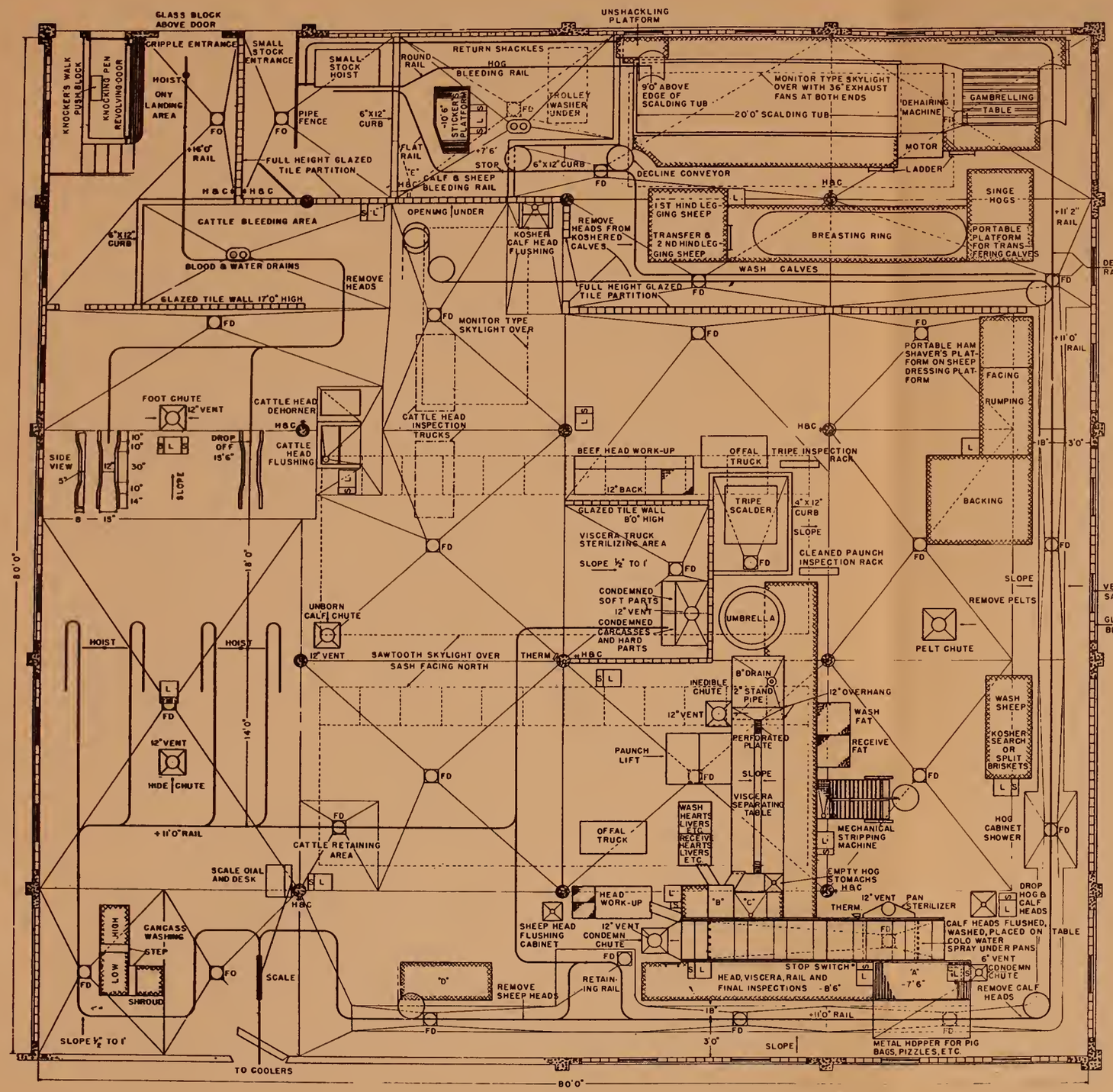

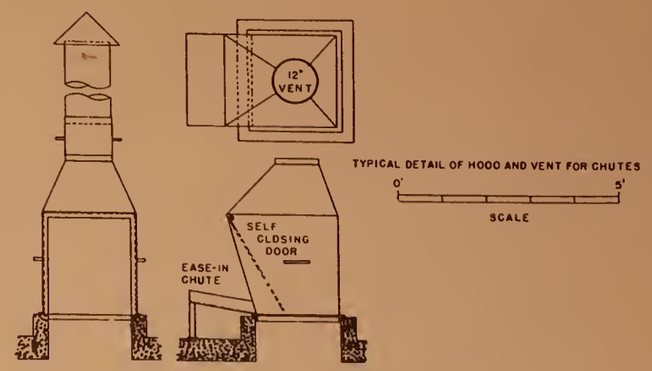

SLAUGHTER RATES

HOGS & CALVES 20-75 PER HOUR
SHEEP 20-100 PER HOUR CATTLE 20 PER HOUR
LENGTH OF VISCERA INSPECTION TABLE 20'0"
SIZE OF PANS LARGE 24"X36"X3" SMALL 12"X36"X3"
CARCASSES SPACED 3' C.TO C. ON CONVEYOR CHAIN
HOGS, CALVES AND SHEEP GAMBRELLED 12" BELOW TOP OF DRESSING RAIL.

DISTANCES

TOP OF RAIL TO BOTTOM OF INSPECTION PANS -5'8"
VERTICAL OF RAIL TO INSPECTION TABLE 4'6"
VERTICAL OF RAIL TO EDGE OF ALL FOOT PLATFORMS 18"
DRESSING RAIL HEIGHT ABOVE HIGH POINT OF FLOOR 11'0"
MINUS FIGURES INDICATE DISTANCE BELOW TOP OF DRESSING RAIL PLUS FIGURES INDICATE DISTANCE ABOVE HIGH POINT OF FLOOR.

MAXIMUM CONVEYOR CHAIN SPEEDS; HOGS AND CALVES 225' PER HOUR SHEEP 300' PER HOUR.

CHUTES FOR CONDEMNED AND INEDIBLE MATERIAL DISCHARGE INTO A HASHER & WASHER OR CRUSHER. THEY MAY ALSO DISCHARGE INTO CLOSED WATER TIGHT METAL HOPPERS HAVING ADEQUATE DRAINAGE. SUITABLE MEANS FOR M.I.D. CONTROL PROVIDED ON HOPPERS FOR CONDEMNED MATERIAL. IF SUCH FACILITIES CANNOT BE INSTALLED, THEN A MECHANICAL LIFT SHOULD BE PROVIDED IN THE VISCERA TRUCK STERILIZING AREA FOR LIFTING CONDEMNED AND INEDIBLE MATERIAL INTO WATER TIGHT METAL CONTAINERS.

IT IS TO BE NOTED THAT SPACE HAS BEEN PROVIDED BELOW THE SMALL STOCK BLEEDING AREA FOR EQUIPMENT WASHING OR A TRUCKWAY TO THE INEDIBLE PRODUCTS DEPARTMENT.

VISCERA SEPARATING EQUIPMENT IS LOCATED SO THAT VISCERA FROM ALL SPECIES CAN BE HANDLED ON ONE LAYOUT. S/L = STERILIZER & LAVATORY H&C = HOT & COLD WATER HOSE CONNECTIONS.

CARCASS CONVEYOR AND VISCERA INSPECTION TABLE MOVEMENT SYNCHRONIZED.

FLOOR UNDER VISCERA INSPECTION TABLE SEPARATELY DRAINED.

GUARD RAIL OF MOVING TOP VISCERA INSPECTION OMITTED OPPOSITE EVISCERATOR'S STATION.

"A" PLACE HOG HEADS ON TABLE, EVISCERATE, SPLIT HOG CARCASSES, ENUCLEATE KIDNEYS, REMOVE SPERMATIC CORDS, ETC.

"B" SEPARATE HEARTS, LIVERS, LUNGS, SPOT LIVERS, ETC.

"C" CLEAN CUT SETS OF VISCERA.

"D" PULL LEAF LARD, WASH SHEEP CARCASSES, FLUSH OUT CALF CARCASSES, WASH NECKS OF CALVES AND HOGS.

"E" 36" X 42" DOOR 42" ABOVE FLOOR OF SMALL STOCK SHACKLING PEN FOR RETURN OF CALF AND SHEEP SHACKLES.

FLOOR PLAN FOR A SLAUGHTERING DEPARTMENT

0' 5' 10'
SCALE

N

SEE PAGE 42 FOR HEAD HOLDING DEVICE AND PAGE 47 FOR SIZE OF MECHANICAL STRIPPER

J T. JOHNSTONE
ASSISTANT TO THE CHIEF
U S MEAT INSPECTION SERVICE
WASHINGTON D.C
10-30-48

INSPECTION FACILITIES FOR 200 HOGS PER HOUR

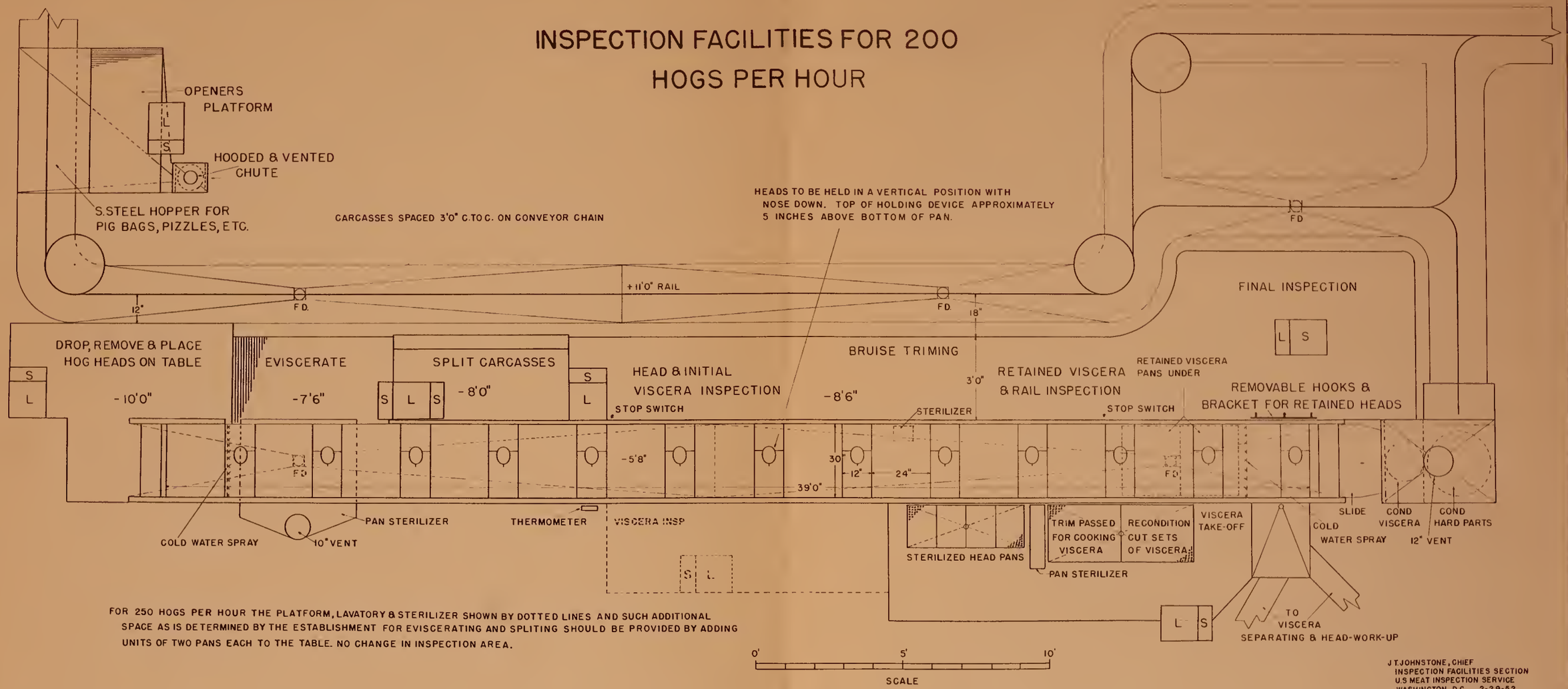

FOR 250 HOGS PER HOUR THE PLATFORM, LAVATORY & STERILIZER SHOWN BY DOTTED LINES AND SUCH ADDITIONAL SPACE AS IS DETERMINED BY THE ESTABLISHMENT FOR EVISCERATING AND SPLITING SHOULD BE PROVIDED BY ADDING UNITS OF TWO PANS EACH TO THE TABLE. NO CHANGE IN INSPECTION AREA.

J.T.JOHNSTONE, CHIEF
INSPECTION FACILITIES SECTION
U.S MEAT INSPECTION SERVICE
WASHINGTON, D.C. 2-29-52

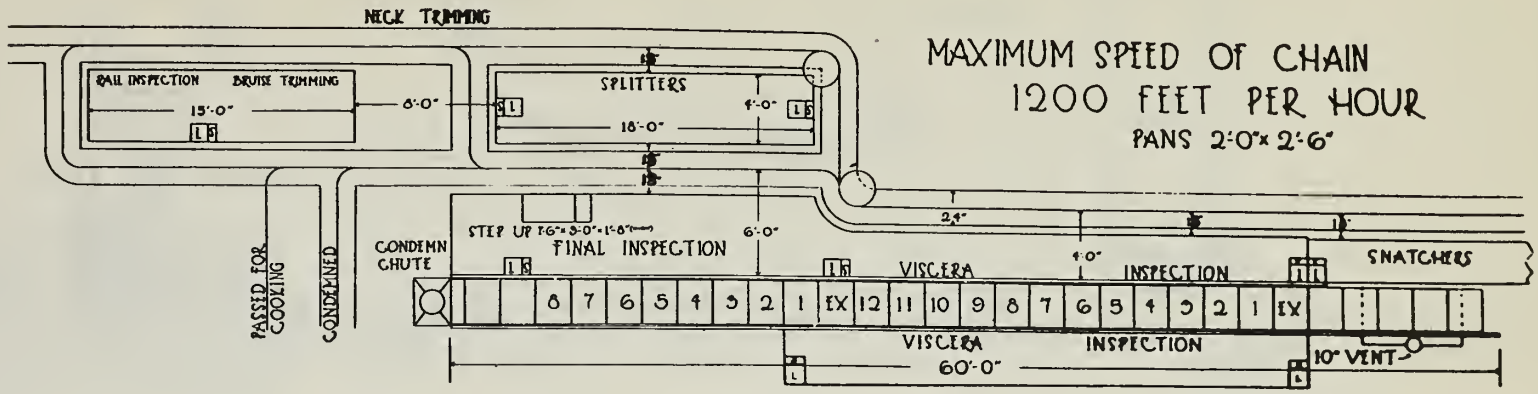

MAXIMUM SPEED OF CHAIN
1200 FEET PER HOUR
PANS 2'-0" x 2'-6"

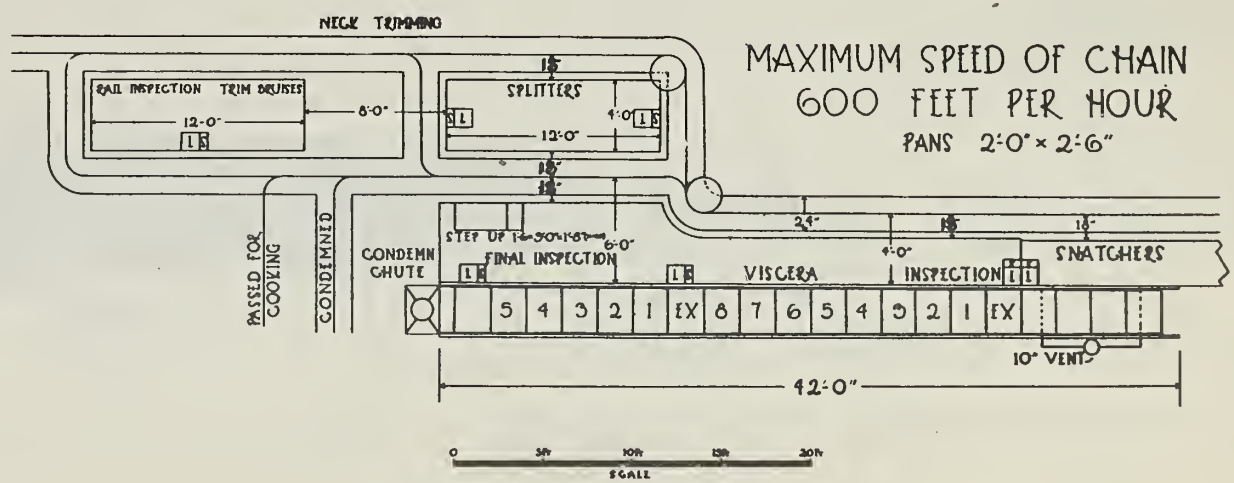

MAXIMUM SPEED OF CHAIN
600 FEET PER HOUR
PANS 2'-0" x 2'-6"

A.R. MILLER
ASSISTANT VETERINARIAN
NEW YORK 9-20-55

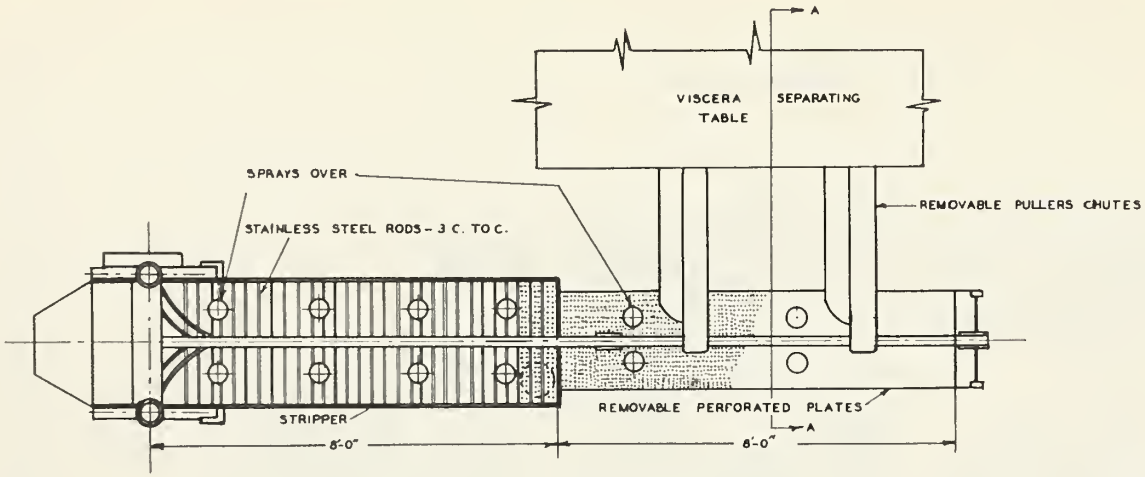

TYPICAL CASING CLEANING LAYOUT FOR PLANTS HAVING NOT MORE THAN THREE PULLERS

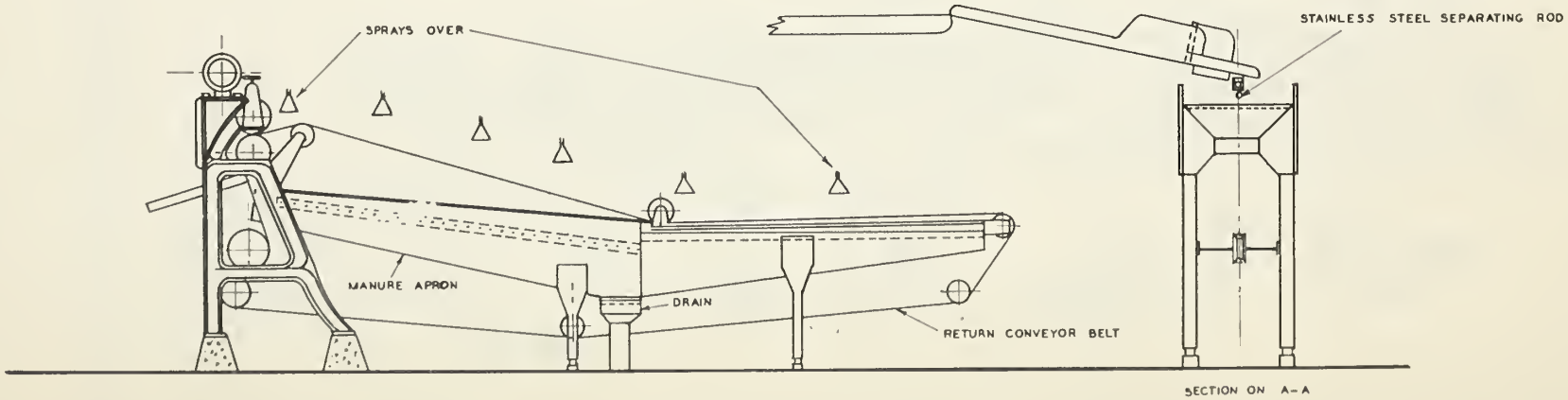

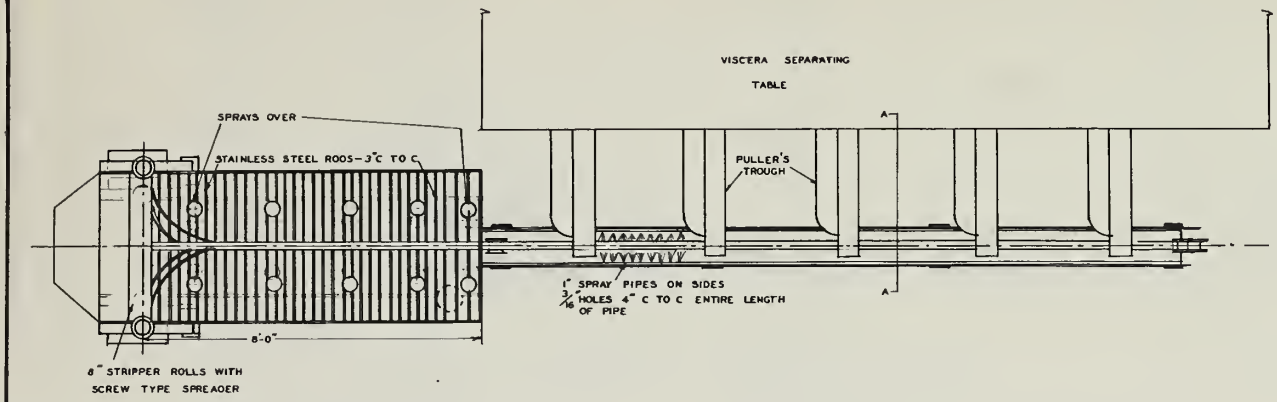

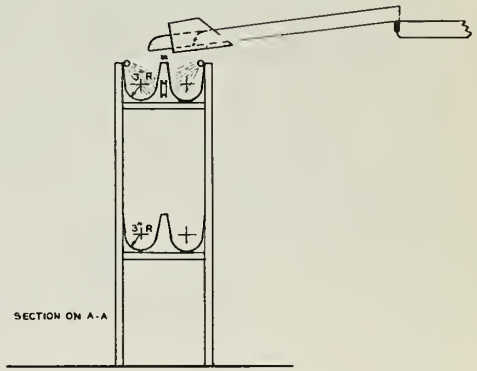

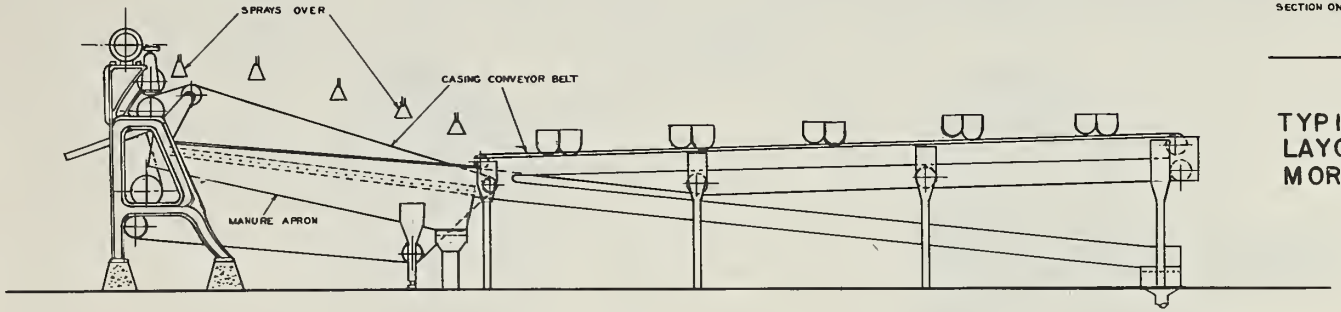

TYPICAL CASING CLEANING LAYOUT FOR PLANTS HAVING MORE THAN THREE PULLERS

SUGGESTED EQUIPMENT FOR HOLDING SETS OF SHEEP INTESTINES WHILE ROUNDS ARE PULLED BY A MECHANICAL STRIPPER

TWO OR MORE HOLDERS SHOULD BE PROVIDED SO THAT OPERATIONS ARE NOT INTERRUPTED ON LARGE SLAUGHTERING LAYOUTS

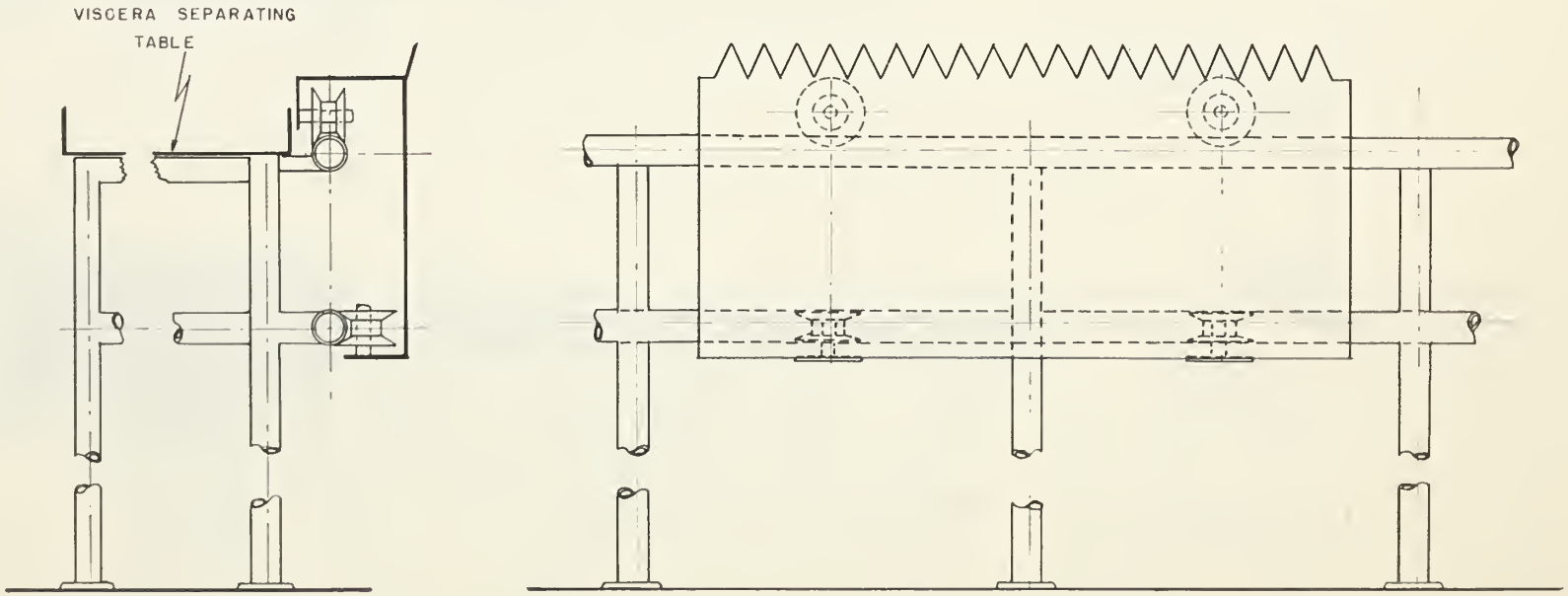

DRAWN BY G JOOLKOS
MID NOV 15 1951

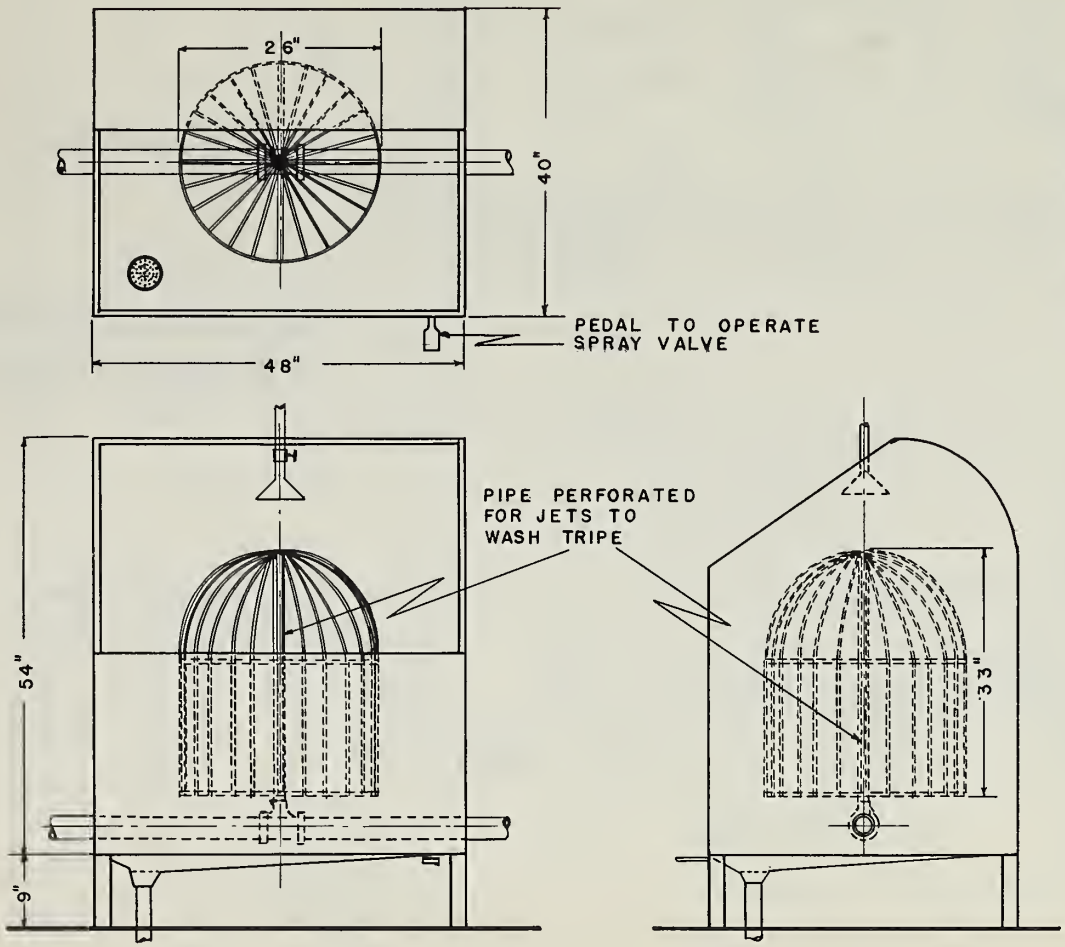

DOME IS CONSTRUCTED OF ½" ⌀ RODS ABOUT 1½" APART AND MOUNTED ON A PIPE SO DOME CAN REVOLVE

PIPE ON WHICH DOME IS MOUNTED IS PERFORATED

DRAIN IS CONNECTED TO THE DRAINAGE SYSTEM

TRIPE WASHER

JAN. 1952

C. J. DOLKOS

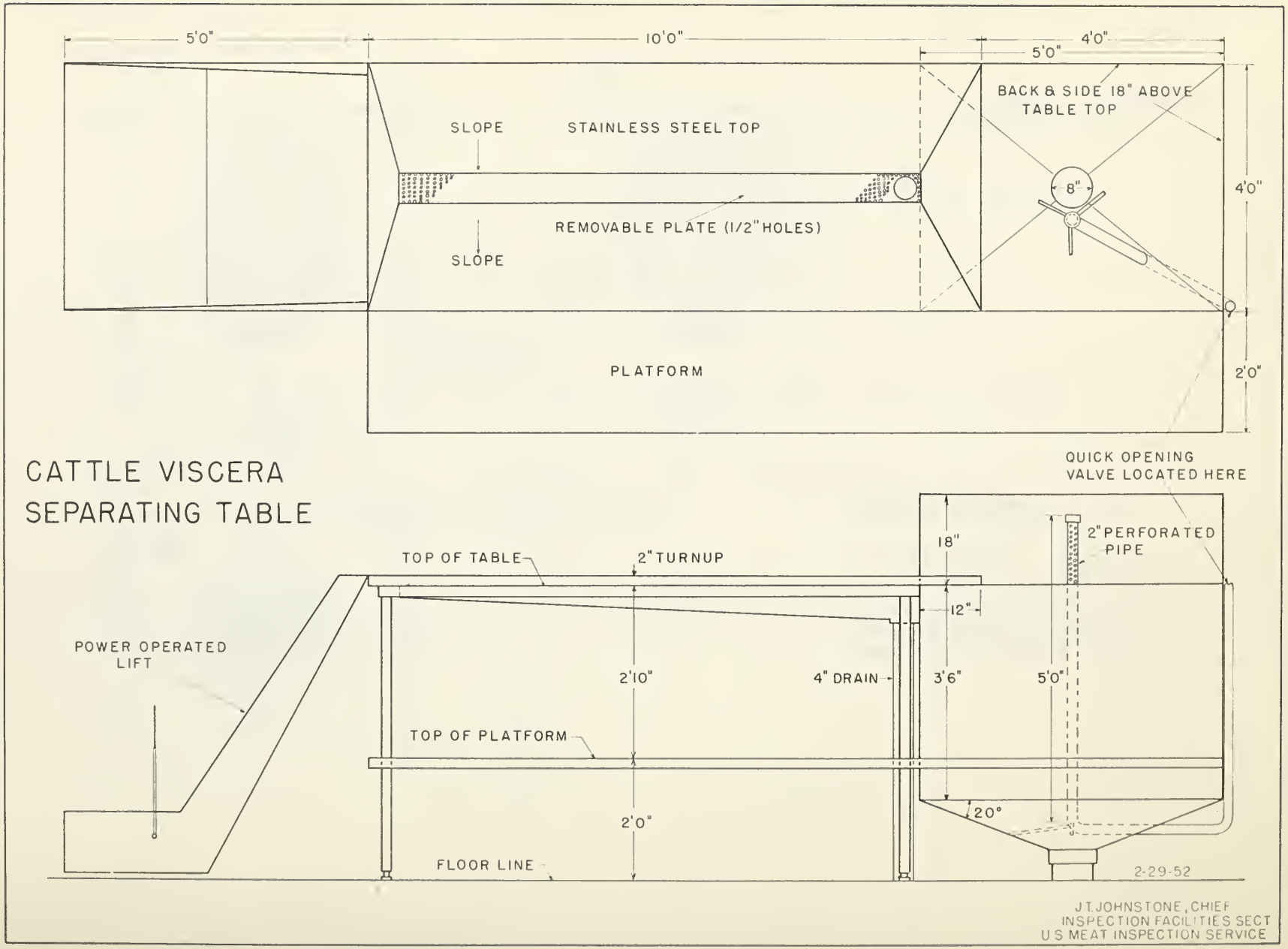
5'0"
10'0"
4'0"
5'0"
BACK & SIDE 18" ABOVE TABLE TOP
SLOPE
STAINLESS STEEL TOP
8"
4'0"
REMOVABLE PLATE (1/2" HOLES)
SLOPE
PLATFORM
2'0"
CATTLE VISCERA SEPARATING TABLE
QUICK OPENING VALVE LOCATED HERE
18"
2" PERFORATED PIPE
TOP OF TABLE
2" TURNUP
12"
POWER OPERATED LIFT
2'10"
4" DRAIN
3'6"
5'0"
TOP OF PLATFORM
20°
2'0"
FLOOR LINE
2-29-52
J.T. JOHNSTONE, CHIEF
INSPECTION FACILITIES SECT
U.S. MEAT INSPECTION SERVICE

TYPES OF CATTLE HEAD FLUSHERS & WASHERS

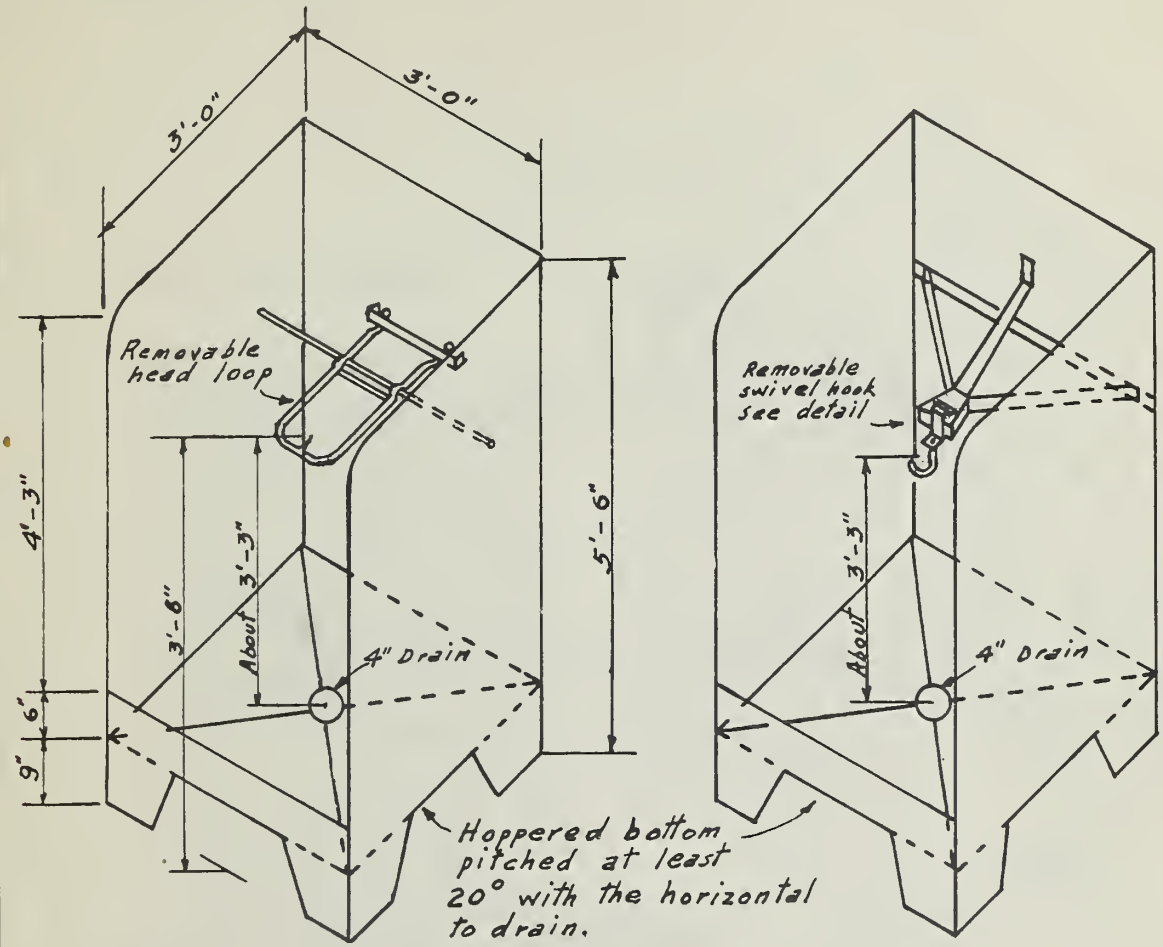

Constructed of rust-resisting metal (stainless steel), directly connected to drainage system through a deep seal trap. Area in which equipment is located has separate drainage.

Dimensions of flusher used only for calf heads may be 2'-0" x 2'-0" in plan

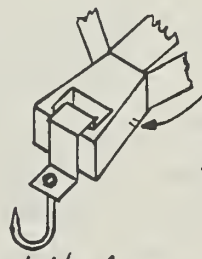

Detail of removable swivel hook.

DWN JOP.
CKD GHS.

M. I. D.
WASHINGTON D.C. 8-20-46

TYPE OF CATTLE HEAD FLUSHER & WASHER

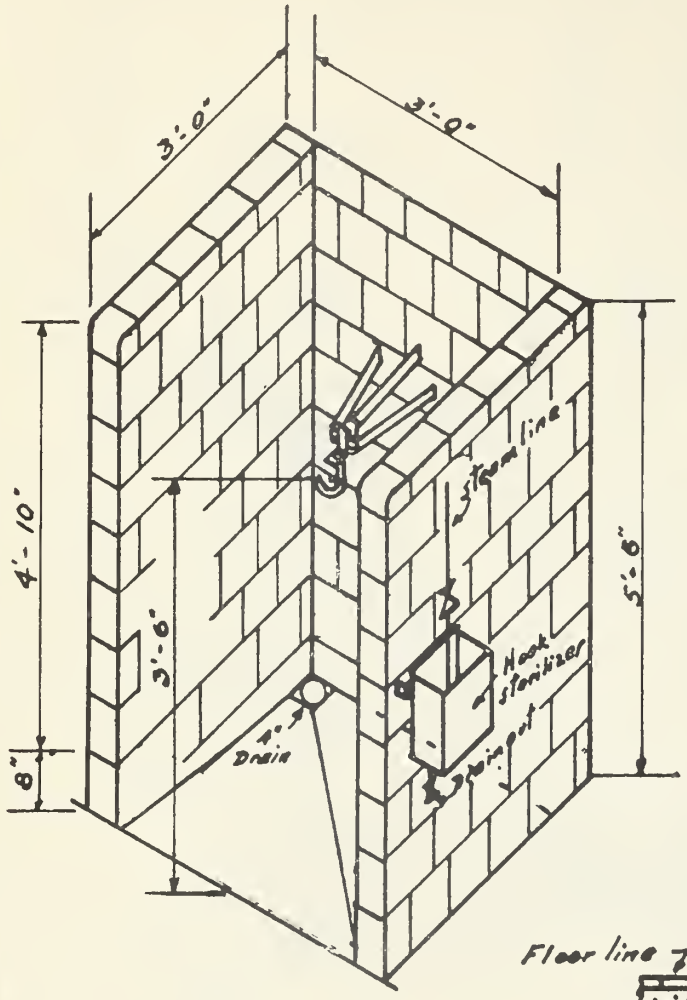

CROSS SECTION

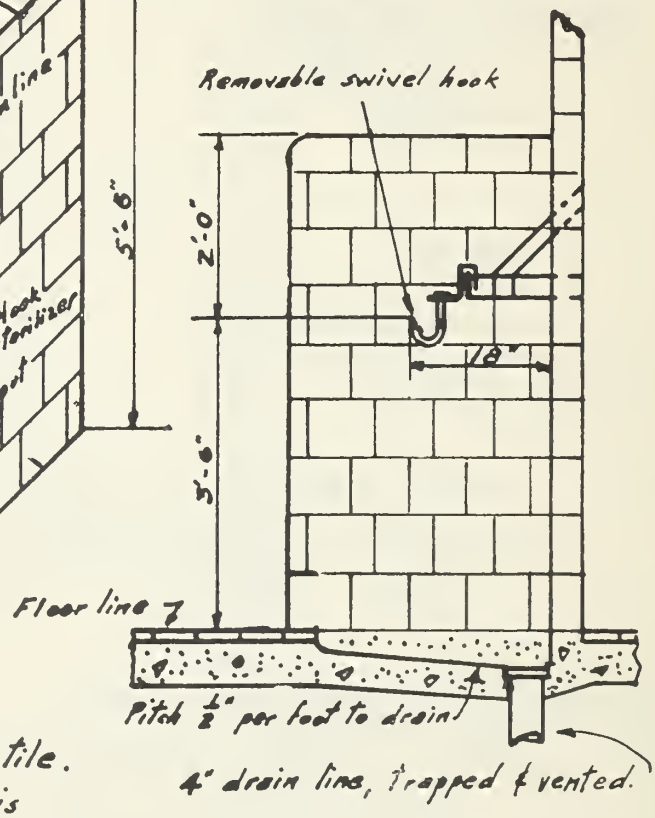

Constructed of glazed tile. The bottom of the flusher is depressed 3" below the floor line, pitched ½" per foot to floor drain located at the back of the washer.

DWN. JOP.
CKD. GHS.

M. I. D.
WASHINGTON, D.C. 8-24-46

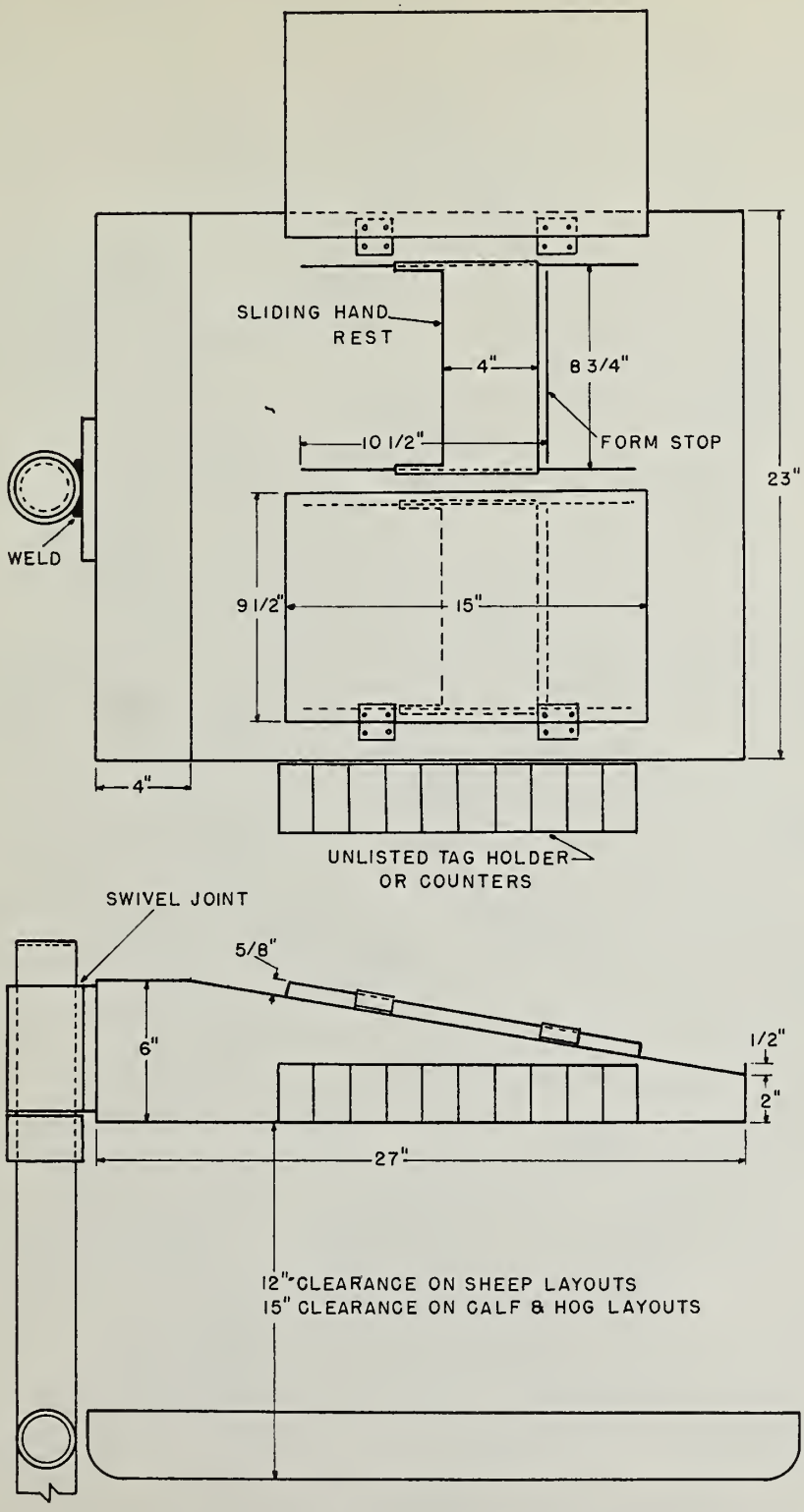

SWINGING DESK WITH POST-MORTEM FORM HOLDERS FOR INSPECTORS CONDUCTING INSPECTION ON A MOVING TOP VISCERA INSPECTION TABLE.

J.T.J.
2-29-52